Smart Valve Positioner

TS700 Series

Instruction Manual

Ver. PM-TS700EN-02/2022

Table of Contents

1 Introduction

1.1 General information for the user

This instruction includes installation, operation, maintenance, and parts information for Tissin TS700 Valve Positioner. Keep these instructions in a location which is easily accessible to every user and make these instructions available to every new owner of the device.

- Installation, commissioning and maintenance of the product can only be performed by trained specialist personnel who have been authorized by the plant operator to do so.
- Before installing or commissioning, be sure to read and thoroughly understand the product manual and operate the product properly.
- Operators must strictly observe the applicable national regulations with regards to installation, function tests, repairs, and maintenance of electrical products.
- Warnings and Cautions must be observed to prevent operator injury or damage to valve parts.

The manual can be altered or revised due to hardware of software upgrades without any prior notice. Please visit our website (www.tissin.co.kr) and check the latest documentation.

1.2 Limited warranty and disclaimer

- This product has been fully inspected and shipped through a thorough quality inspection procedure. The manufacturer warranty period of the product is 18 months after the product is shipped from Tissin in Korea.
- For any failure or damage reported within the warranty period which is clearly our responsibility, a replacement product or necessary parts will be provided. This limited warranty applies only to our product independently, and not to any other damage incurred due to the failure of the product.
- Using the device in a manner that does not fall within the scope of its intended use, disregarding this manual, using under unqualified personnel, or making unauthorized alterations releases the manufacturer from liability for any resulting damage. This renders the manufacturer's warranty null and void.

1.3 Requirement for safety

This manual contains notices you have to observe in order to ensure your personal safety, as well as to prevent damage to property. These safety instructions are intended to prevent hazardous situations and/or equipment damage. For the safety, it is important to follow the instructions in the manual.

WARNING

Failure to observe the warning may result in serious injuries or death.

CAUTION

Failure to observe this warning may result in damage to the device or personal injury.

NOTICE

Failure to observe the warning may result in damage to the device or may degrade performance.

CAUTION

- Only trained and authorized person should operate the machinery and the equipment.
- Do not use this positioner out of the range of its specifications as this can cause failure.
- Do not service or attempt to remove product and machinery/equipment until safety is confirmed.
- Before loosening the pneumatic lines and valves, turn off the pressure and vent the pneumatic lines.
- Observe applicable accident prevention and the safety regulations for electrical equipment.
- Before handling the device or equipment, turn off the power supply and secure it from re-activation.

1.4 Basic safety instructions for use in Ex area

To prevent the risk of explosion, observe not only the basic safety instructions in the respective operating instructions for operation in the Ex area, but also the following.

WARNING

- Observe the applicable safety regulations (also national safety regulations) as well as the general rules of technology for construction and operation.
- Make sure that the device is suitable for the area of use.
- Check the positioner's certified and permitted explosion proof range.
- Close all unnecessary Cable Gland with the locking screws approved by the explosion site.

1.4.1 Conditions to maintain intrinsically safety (Ex i)

WARNING

- Make sure to connect "Intrinsic safety" type protection device to intrinsically safe circuit only.
- Observe the specifications for the electrical data on the certificate and in technical data.
- In order to maintain intrinsically safe protection, be sure to use a barrier that meets the following specifications.

Barrier specifications	**Ui**	**Ii**	**Pi**	**Ci**	**Li**
Main power	28V	101mA	707mW	0.6nF	6uH
Position transmitter, Alarm1, Alarm2, Limit Switch(Dry contact type)	28V	101mA	707mW	0.6nF	6uH
Limit Switch (Proximity type)	16V	26mA	34mW	30nF	50uH

Note : Please refer to the relevant certificate for details.

1.4.2 Intrinsically safety (Ex i) Certificate

Evaluation for the certificate is in progress now.

2 Product Description

2.1 Function

Smart valve positioner TS700 series controls the valve stroke in response to an input signal of 4~20mA DC from the control panel, DCS or calibrator.

2.2 Features

- Fail freeze function
- Zero air consumption when standby signal
- Prevents circuit board corrosion by external air exhaust design
- Built in air filter (5 micron) for protect PIEZO valve
- LCD and 4 button local control
- Quick and easy calibration
- PST and alarm function
- Built-in self-diagnostic function
- Strong vibration resistance and impact resistance

2.2 Options

Optional functions can be added simply by installing modules.

- Position transmitter (4~20mA DC Feedback signal)
- HART communication (Ver. HART 7)
- Limit switch (Mechanical or Proximity type)
- Remote control type (TS720)

2.4 Applications

TS700 is mounted on a pneumatic control valves and is used for fluid control of industrial parts.

- Oil and gas
- Chemicals
- Power plant
- Paper
- Water treatment
- Pharmaceutical
- Printing and dyeing processing
- Food and beverage
- Etc.

2.5 Label

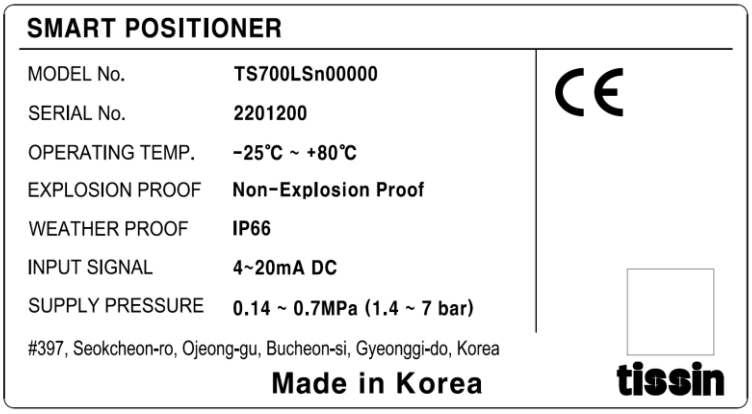

Item	Description
MODEL No.	Indicate the model number.
SERIAL No.	Indicate the serial number.
OPERATING TEMP.	Indicate the allowable operating temperature.
EXPLOSION PROOF	Indicate the certified explosion proof grade.
EXPLOSION PROOF TEMP.	Indicate the ambient temperature range for the explosion proof. This temperature range must be observed when using in explosion-proof areas.
WEATHER PROOF	Indicate the enclosure grade.
INPUT SIGNAL	Indicates input current signal range.
SUPPLY PRESSURE	Indicate the allowable input supply pressure range.
Ui, Ii, Pi, Ci, Li	Indicate required barrier specification for intrinsically safety circuit configuration. Please refer to the certificate for the detailed specifications.

2.6 Product Code

Model	TS700									
Standard type	**TS700**									
Remote type	**TS720**									
Stainless steel 316	**TS705**									
Motion type	Linear	L								
	Rotary	R								
Acting type	Single		S							
	Double		D							
Explosion proof type	Non-explosion proof			N						
	ATEX & IECEx			A						
	CCC & NEPSI			C						
	KCs			K						
Connection type	Conduit entry / Air connection									
	G(PF)1/2 / PT1/4				1					
	G(PF)1/2 / NPT1/4				2					
	NPT1/2 / NPT1/4				3					
	M20 / NPT1/4				4					
	M20 / G1/4				5					
Lever (Linear type)	10~80mm					1				
	70~150mm					2				
	Adapter type (30mm)					3				
	Adapter type (70mm)					4				
Lever (Rotary type)	M6 x 39L (Fork lever type)					1				
	NAMUR type					5				
Ambient Temp.	-25~80℃						S			
	-40~80℃						L			
Communication	None							0		
	4-20mA Position transmitter							1		
	HART							2		
	HART with 4-20mA Position transmitter							3		
Limit switch (For TS700 & TS705)	None								0	
	Mechanical type								M	
	Proximity type								P	
	With dome cover (without Limit switch)								D	
Cable length (For TS720)	5m								1	
	10m								2	
	User define (Less than 20m)								X	
Fail Position	Fail Freeze type									F
	Fail Safe type									S

2.7 Specification

Model		TS700	TS705
Input signal		4~20mA DC	
Impedance		500Ω (20mA DC)	
Supply pressure		0.15~0.8MPa	
Stroke		10~150mm(Linear type), 0~90^0(Rotary type)	
Air connection		PT1/4, NPT1/4, G1/4	
Gauge connection		PT1/8, NPT1/8	
Conduit		G1/2, NPT1/2, M20	
Explosion proof type		In progress now	
Enclosure		IP66	
Ambient Temp.	Acting Temp.	-25℃～+80℃ (Standard type), -40℃～+80℃ (Low temp type)	
	Explosion proof Temp.	In progress now	
	LCD operating Temp.	-30℃～+85℃	
Linearity		±0.5% F.S.	
Sensitivity		±0.2% F.S	
Hysteresis		±0.5% F.S	
Repeatability		±0.3% F.S	
Air consumption		Below 0.01 LPM (Sup.=0.15MPa)	
Required air quality		Class 4 (ISO8573-1)	
Flow capacity		Over 75 LPM (Sup.=0.15MPa)	
Material		Aluminum die cast	Stainless steel 316
Weight		1.6 kg	4.0 kg

Option specification

Option	Item	Specification
HART	HART version	HART 7
Position transmitter	Wire connection type	2 Wires
	Supply voltage	10~30V DC
Limit switch	Mechanical type	OMRON D2F-LA AC125V, 3A, DC30V, 2A
	Proximity type	P+F NJ1,5-F-N DC8.2V 8.2A

Note: Please contact our sales department for other specifications.

2.8 Structure

2.8.1 External structure

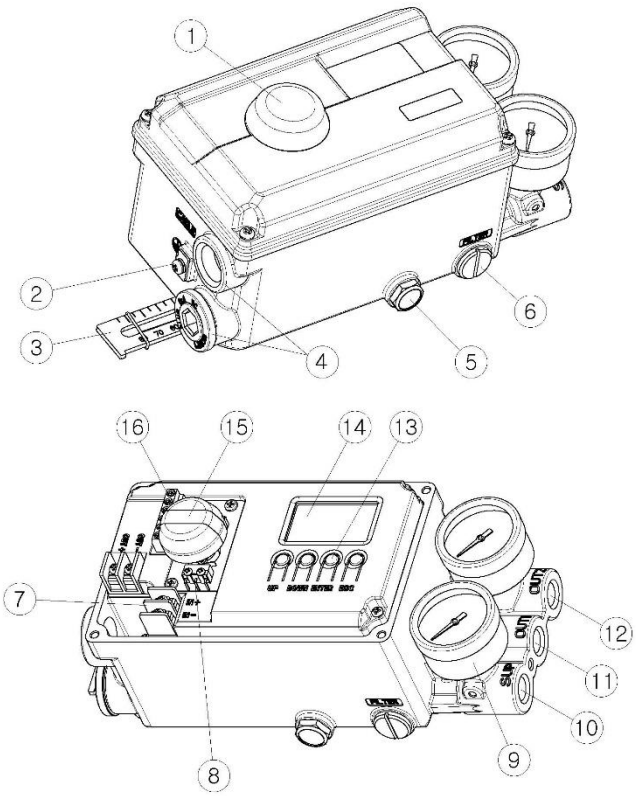

① Dome cover
② External ground bolt
③ Feedback lever
④ Conduit
⑤ Vent filter
⑥ Air supply filter
⑦ Power terminal block
⑧ Limit switch
⑨ Pressure gauge
⑩ Supply port
⑪ OUT1 port
⑫ OUT2 port
⑬ Button
⑭ LCD
⑮ Dome indicator
⑯ Limit switch terminal block

Note: ⑮ Dome indicator is only mounted on the product with limit switch option.

2.8.2 Internal structure

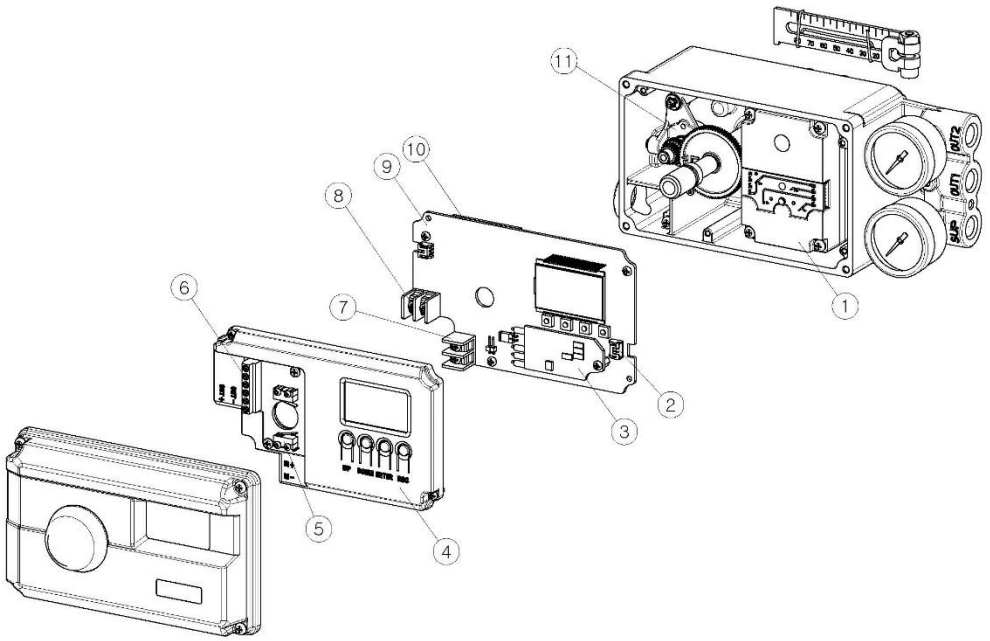

① PIEZO valve	⑧ Feedback terminal block (Option)
② Button	⑨ Main PCB
③ Position transmitter module (Option)	⑩ HART module (option)
④ PCB cover	⑪ Potentiometer
⑤ Limit switch (Option)	
⑥ Limit switch terminal block	
⑦ Power terminal block	

2.9 System configuration

Basically, the control valve system consists of a positioner for controlling the pneumatic pressure of the actuator, an actuator for controlling the opening of the valve, and a valve for controlling the flow of the fluid.

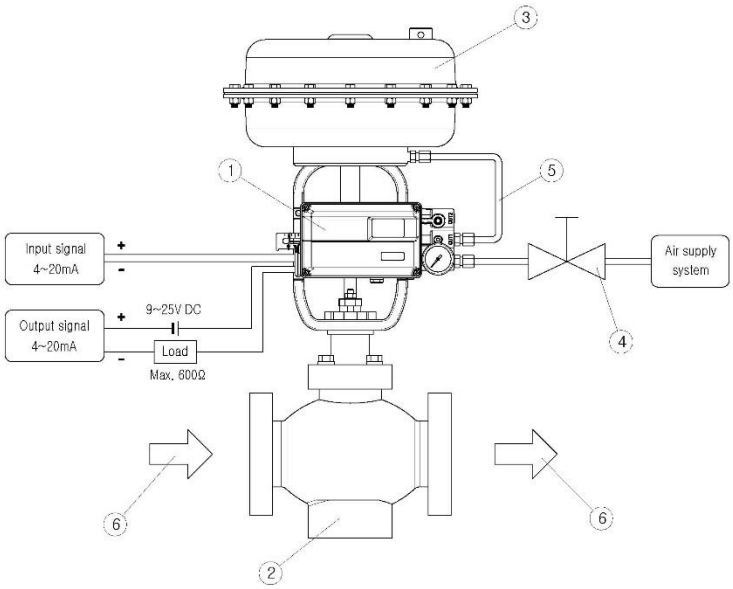

① Positioner
② Valve
③ Actuator
④ Regulator
⑤ OUT1 line
⑥ Fluid

2.10 Principle of operation

TS700 receives 4-20mA input signal of the control room, micro-processor (CPU) compares input signal with position feedback through potentiometer and sends control signal to I/P conversion module torque motor, torque motor converts it to a pneumatic signal to controls PIEZO valve to controls the opening of the control valve by converting output pressure of OUT1 and OUT2.

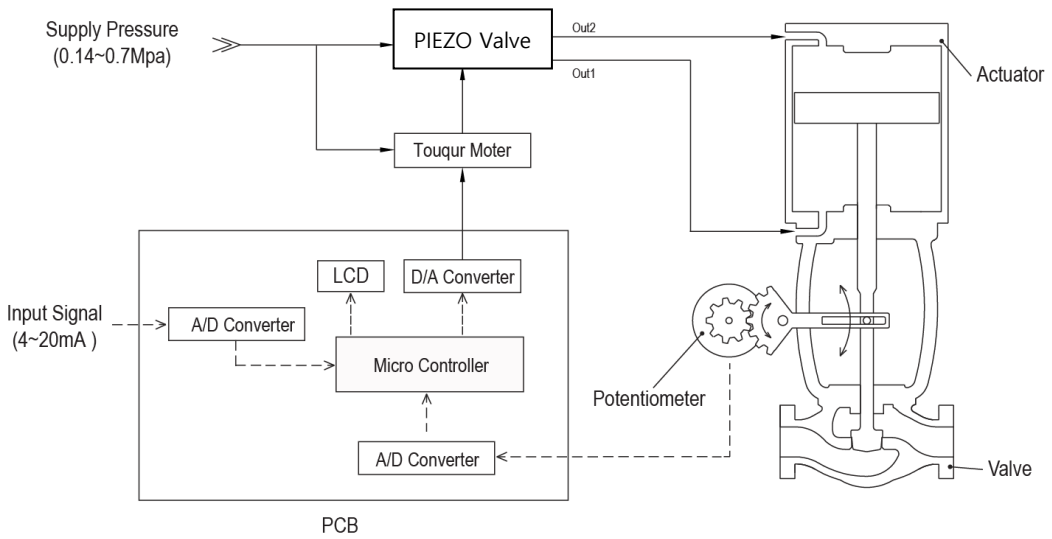

2.11 Product Dimension

2.11.1 TS700 standard type

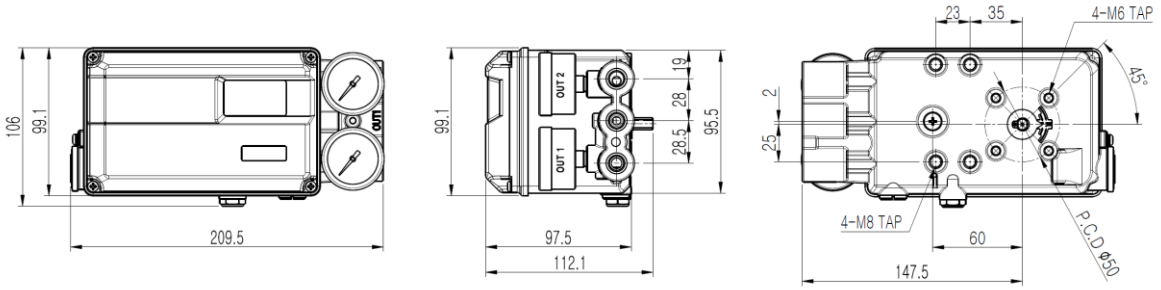

2.11.2 TS700 with limit switch type

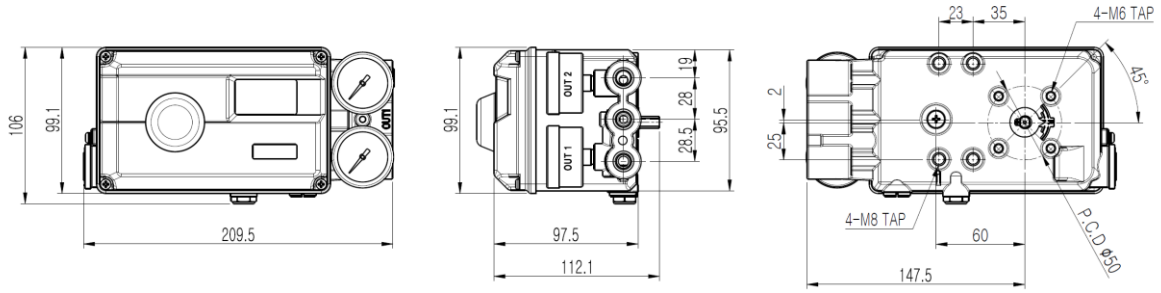

2.11.3 TS700 feedback shaft

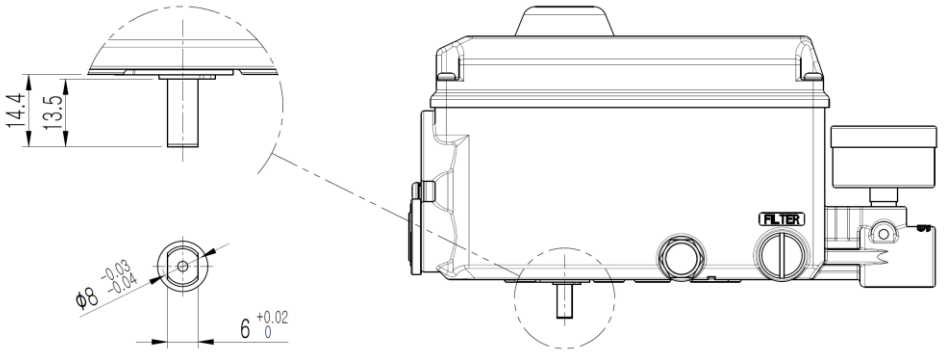

3 Installation

3.1 Before installation

⚠WARING

- Make sure if TS700 is appropriate to the valve and actuator installation conditions and the site requirements specifications before installation.
- If the installation state is not correct, TS700 control characteristics may be degraded.

3.2 TS700L installation

3.2.1 Notes on installation

When make the mounting bracket and connecting the lever to the stem connection pin, be sure to observe the following two points.
If failure to observe the followings, it will affect the product performance such as linearity.

⚠ NOTICE

① When the valve stroke is 50%, the feedback lever should be horizontal.
② When the valve stroke is 50%, the stem connection pin must be located at the numeric position marked on the feedback lever that is corresponding to the valve stroke.

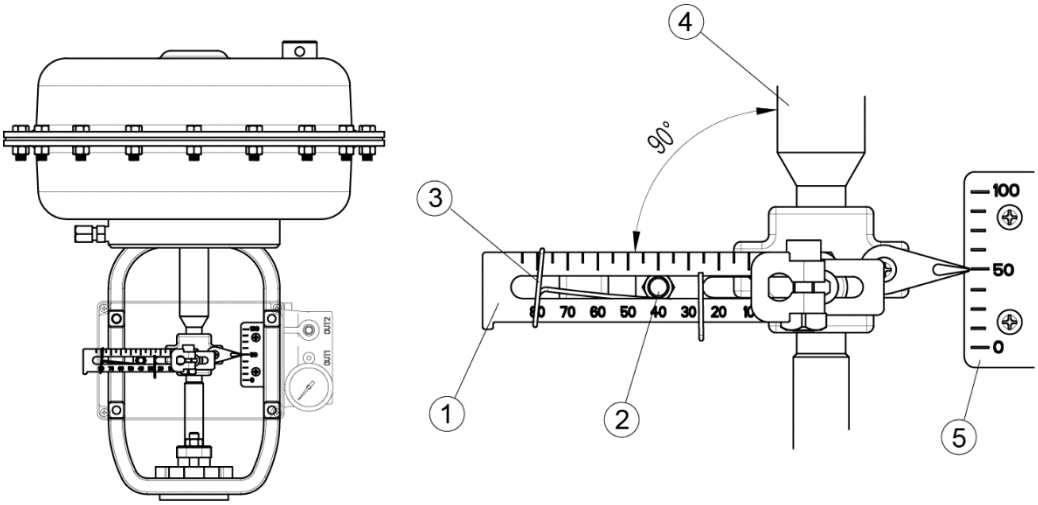

① Feedback lever
② Stem connection pin
③ Pin fixing spring
④ Actuator stem
⑤ Valve opening indicator

3.2.2 Effective rotation angle range of feedback lever

The effective rotation angle of TS700L lever is respectively 30º upward and downward that is based on horizon.
Follow 3.2.1 notes, effective rotation angle can be maintained to achieve the best performance.

⚠ NOTICE

- If the rotation angle range is too small during operation, the performance of products such as linearity may be degradation.
- If the rotation angle range is too big during operation, may damage the product or cause malfunctions.

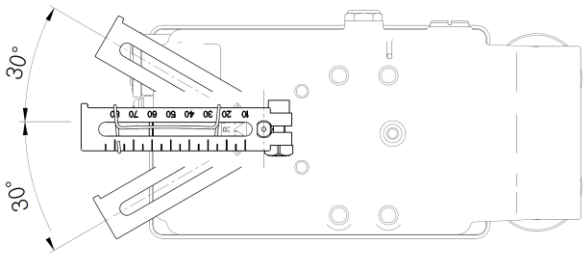

3.2.3 Lever type and dimension

The numeric positions marked on the feedback lever correspond to the valve stroke, and the stem connection pin must be connected to the corresponding marked location.

Lever No.	Valve stroke	Dimensions
No.1	10~80mm	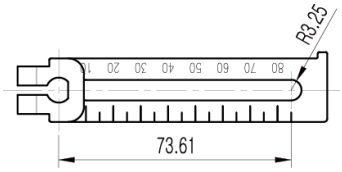
No.2	70~150mm	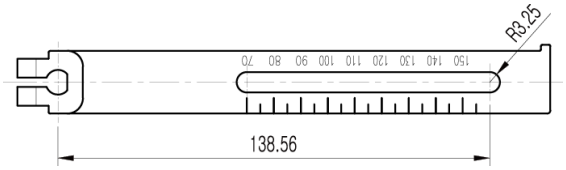
No.3	10~30mm (For the tube less type actuator)	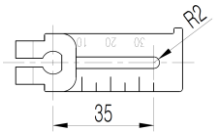
No.4	10~70mm (For the tube less type actuator)	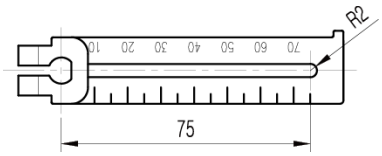

3.2.4 Bracket Installation

Refer to the TS700L drawing (refer to 2.11.1) and actuator drawing, please make appropriate bracket and install the positioner on the actuator.

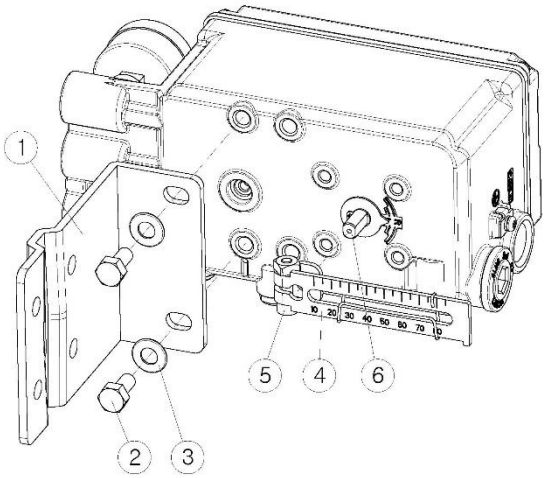

① Bracket
② Bolt (M8)
③ Washer
④ Feedback lever
⑤ Lever fixing bolt
⑥ Main shaft

3.2.5 Dimension after installation

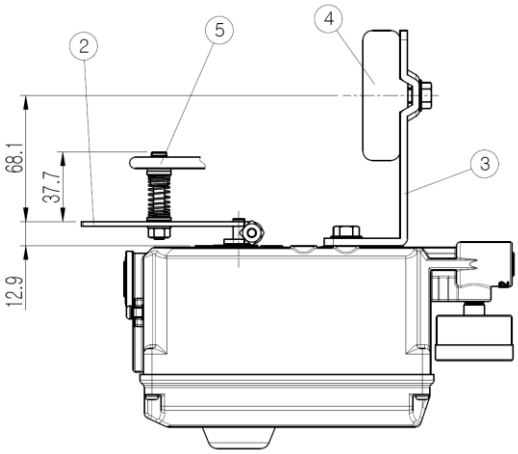

<Lever No.3 or 4 >

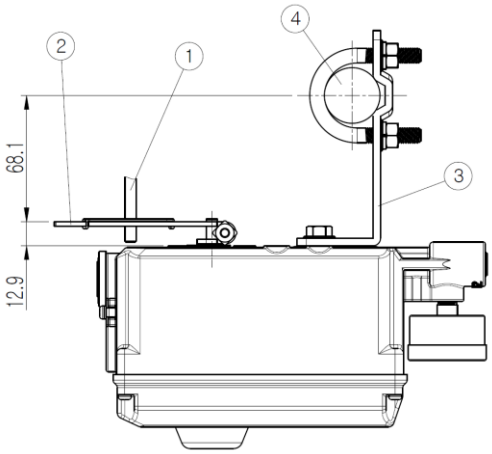

<Lever No.1 or 2>

① Stem connection pin
② Feedback lever
③ Bracket
④ Actuator york
⑤ Lever adapter

3.3 TS700R installation

3.3.1 Rotary type installation examples

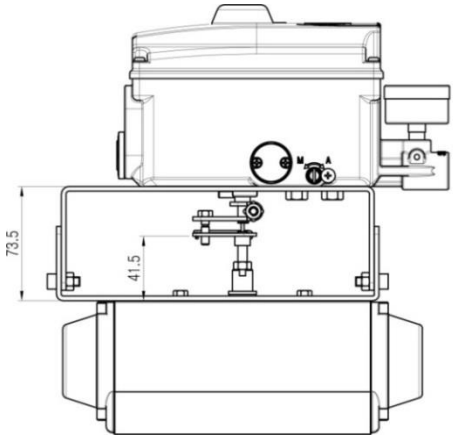

<Fork lever type>

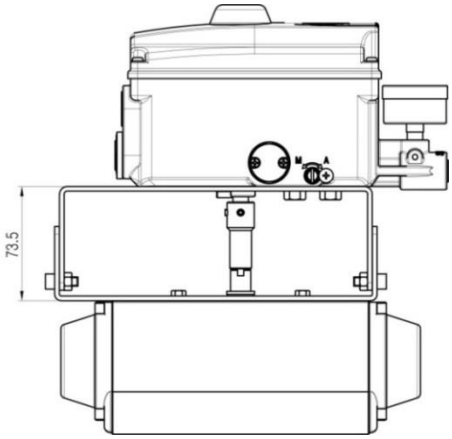

<NAMUR type>

3.3.2 Rotary type bracket installation components

Components No.1~9 are provided with the brackets.

The brackets support the NAMUR mounting standard (VDI/VDE3835, IEC60534-6-2).

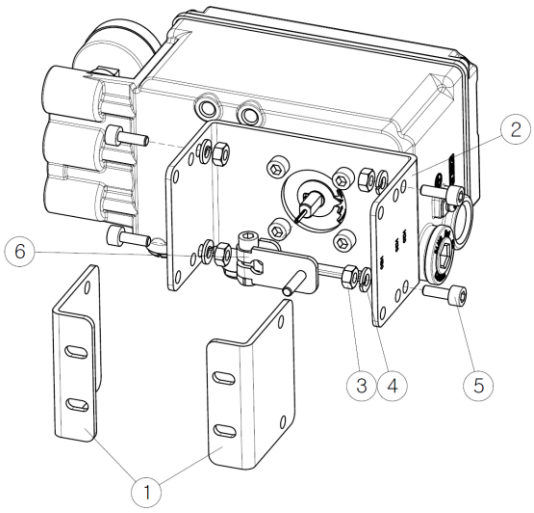

<Fork lever type>

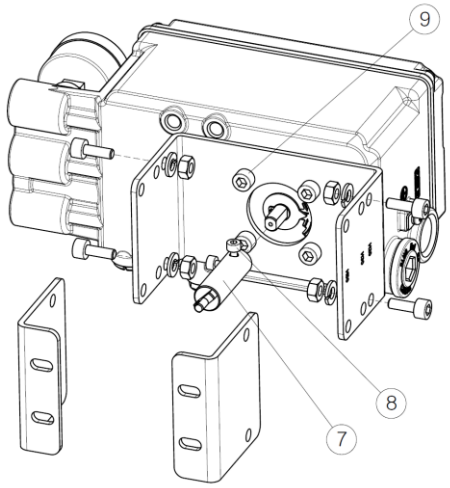

<NAMUR type>

① Lower bracket(2)
② Upper bracket(1)
③ M6 nut(4)
④ Spring washer (4)
⑤ M6*15 bolt (4)
⑥ Fork lever type shaft lever(1)
⑦ NAMUR shaft adapter (1)
⑧ M4 bolt(2)
⑨ M6*15 bolt(4)

3.3.3 TS700R installation steps

1	**Install Lower bracket** Attach two Lower brackets to the actuator and secure it with the bolts.	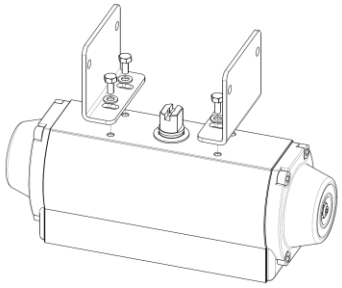
2	**Install Fork lever** Install Fork lever to actuator's stem and tighten with the fixing bolt.	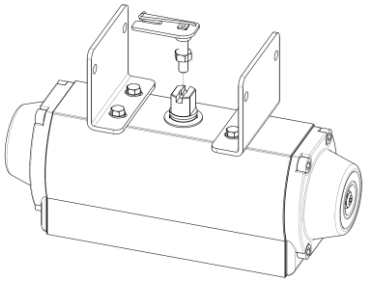
	Decide the start point of Fork lever according to actuator stem's rotation direction.	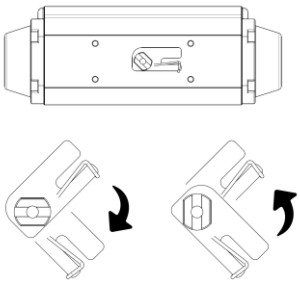
3	**Tighten Upper and Lower brackets** Combine Upper bracket and Lower bracket. Fasten with bolt, nut and spring washer.	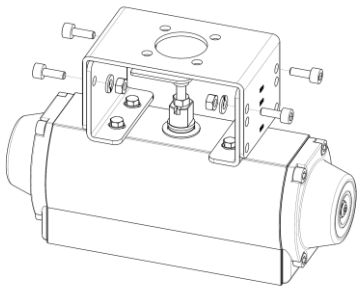
	Tighten the bolts to the corresponding holes(H20, H30, H50) depending on the actuator stem height.	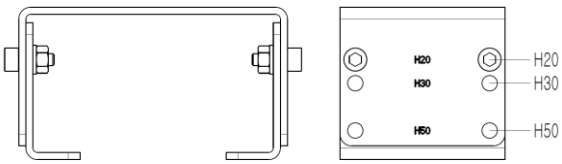

	⚠ **NOTICE**	
	● ②Main shaft and ①Indicator can be rotated 360°. When operating the product, ①Indicator must point ③Effective angle range. ● The product may not operate normally if ①Indicator points the opposite direction, so please consider the direction of ①Indicator when installing ④Shaft lever to ②Main shaft.	
4	**Install Shaft lever** **Fork lever type** Install ④Shaft lever to ②Main shaft and tighten with ⑤Bolt.	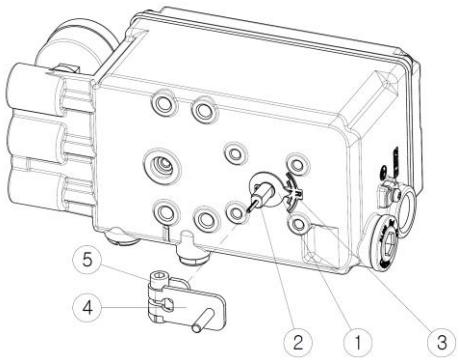
	NAMUR type Install ④NAMUR shaft adapter to ②Main shaft and fix it with two ⑤fixing bolts.	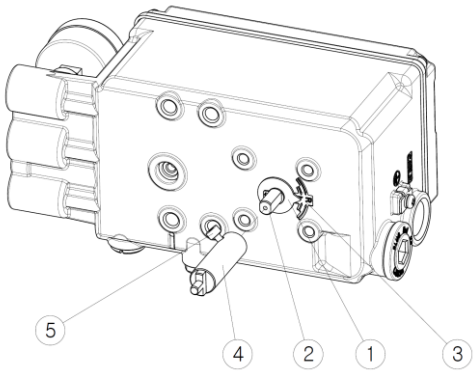
5	**Install the product to Upper bracket and fix it with bolts.** At the moment, put the lever pin(the bottom of Shaft lever) to the hole of Fork lever, and align the center.	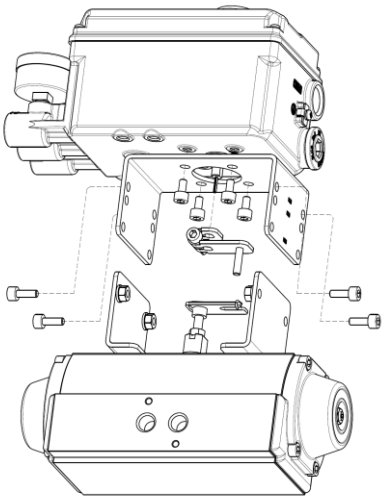

3.4 TS720 Remote type installation

TS720 is designed cable to the sensor part and the main body, it is designed to transmit the change of the stem position of the valve to the body through the potentiometer built in the sensor.

Application site

- Where the valve is located at high or inaccessible location.
- High temperature environment where is over than 85℃. (Non-explosion proof type only)
  (Maximume ambient temperature of the sensor part is 100℃)
- Large vibrating lines.

Installation

① Install Sensor part on the valve, and install Body part on the accessible place.
② Please follow the installation instructions of TS700L or TS700R for Sensor part's installation.
③ Sensor part and Body part are connected by the cable. (the length of cable must not over than 20m)
④ OUT port of Body part should connect to the actuator using Pneumatic pipe.

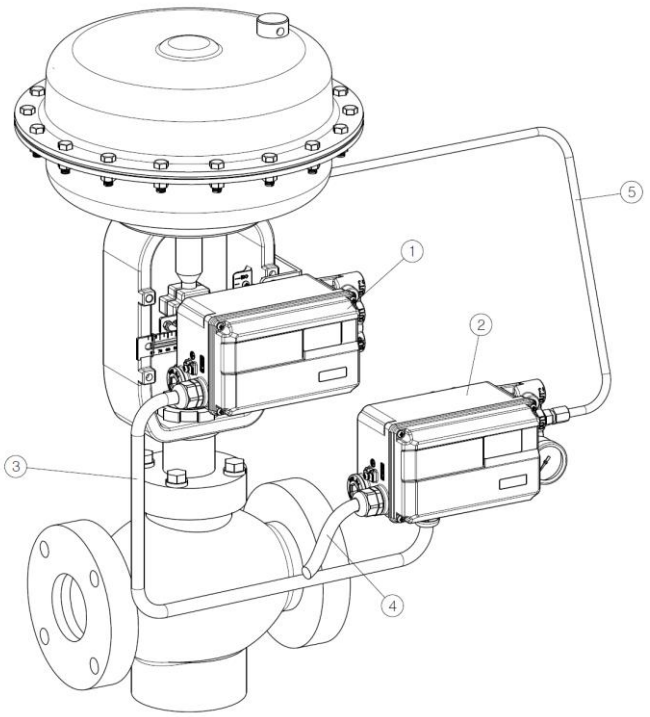

① Sensor part
② Body part
③ Cable
④ Power cable
⑤ OUT1 piping

3.5 Option module Installation

According to the site requirements, the following modules can be purchased separately and installed.

⚠NOTICE

- Please shut off the power supply and install the modules.
- Please connect ⑤Jumper when you install PTM.
- Please disconnect ⑤Jumper when you install HART module or install HART and PTM both.

3.5.1 Position transmitter module(PTM) Installation

① Open the body cover and PCB cover, and install PTM to Main PCB as figure below.

② Please set feedback zero point settings and end point settings again after installed PTM. Please refer to page38 <OUT ZERO> and <OUT END> setting method.

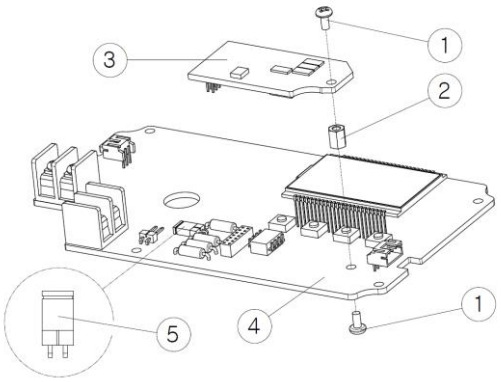

① Fixing bolt
② Module Bracket
③ PTM
④ Main PCB
⑤ Jumper

3.5.2 HART communication module Installation

Open the body cover and PCB cover, and install HART module to Main PCB as figure below.

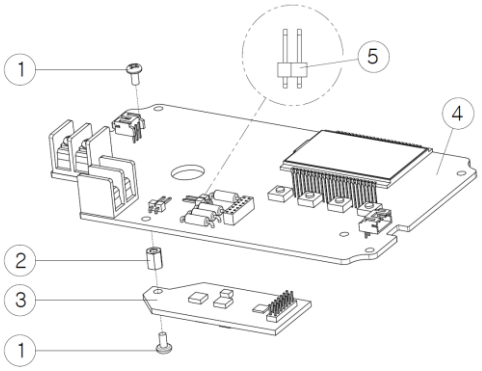

① Fixing bolt
② Module bracket
③ HART module
④ Main PCB
⑤ Jumper

3.5.3 Limit switch module Installation

There are two types of limit switch module, mechanical and proximity type.

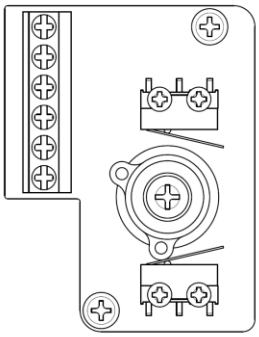

<Mechanical type module>

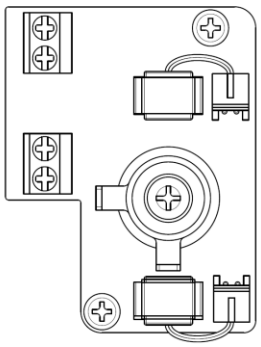

<Proximity type module>

Installation steps

① Open the cover.
② Install the limit switch module to PCB protective cover groove and fix it with fixing bolts.
③ Turn the camshaft and install it to the main shaft.
④ Fix the camshaft with fixing bolts.
⑤ Install the dome indicator to the camshaft.

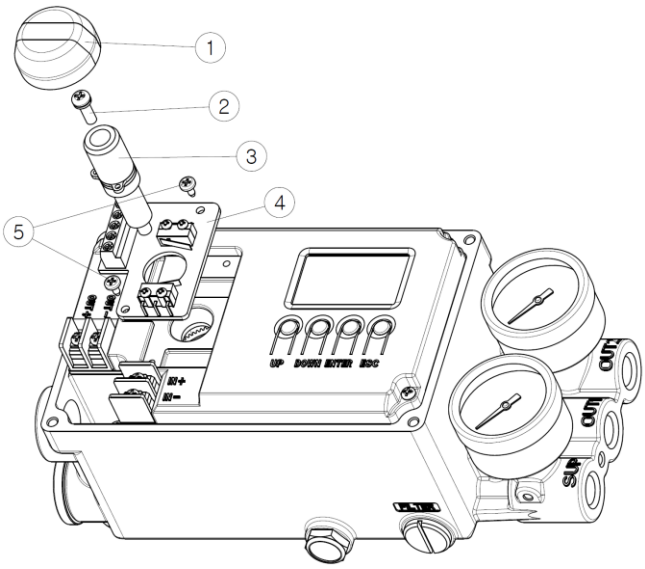

① Dome indicator
② Bolt
③ Camshaft
④ Limit switch module
⑤ Module fixing bolts

Note
Standard product does not have a dome indicator window, so the cover also be replaced when you add limit switch module to the product.

3.5.4 How to adjust limit switch cam

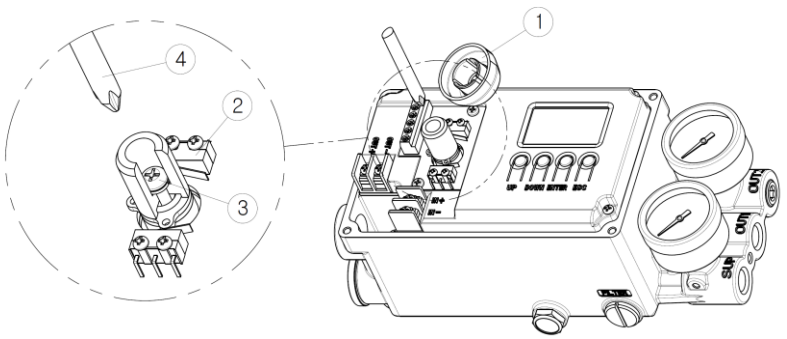

① Dome indicator
② Switch
③ Fixing bolt
④ Phillips screwdriver

The cam position is set at the factory. If you want to change the cam position, please follow the steps below.

① Open the cover and disassemble the dome indicator by referring to the above figure.
② Loosen the fixing bolt slightly with a Phillips screwdriver, but do not disassemble it.
③ Adjust cam 3 and 4 by referring to the figure below, and adjust the angle so that the switch operates at the position you want.
④ After adjusting the angle, fasten the fixing bolt tightly.

Mechanical switch	Proximity switch
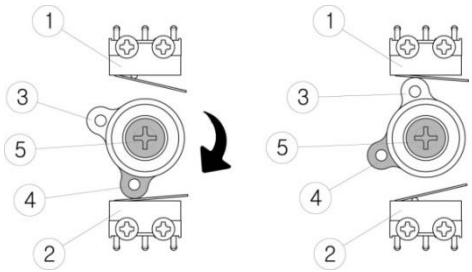	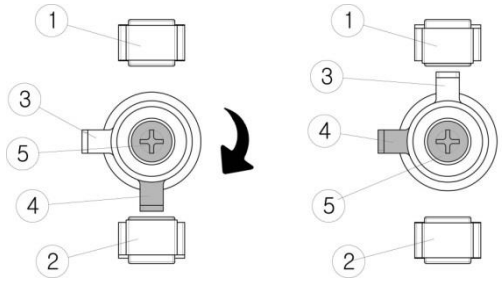
① Micro switch 1 ② Micro switch 2 ③ Operating cam 1 ④ Operating cam 2 ⑤ Fixing bolt	① Proximity switch 1 ② Proximity switch 2 ③ Operating cam1 ④ Operating cam 2 ⑤ Fixing bolt

3.6 How to replace Air filter

⚠ CAUTION

- Be careful when replacing the air filter as the valve may move.
- Please shut off the air pressure supplied to the positioner and replace the filter.

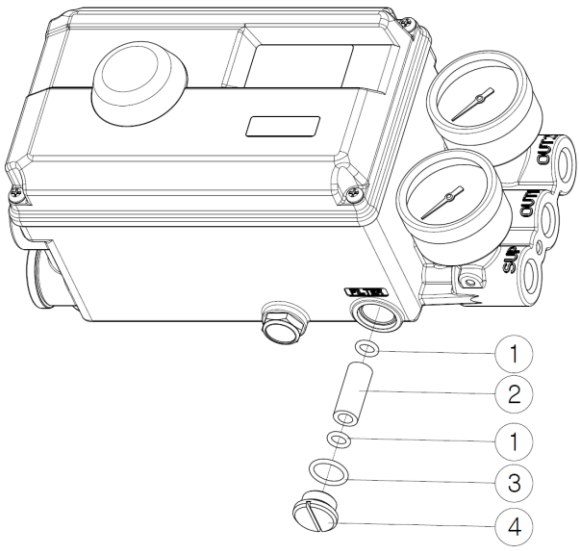

① O-ring

② Filter

③ O-ring

④ Fixing bolt

Purpose	It protects internal PIEZO valve by removing foreign substances contained in the air supplied to the positioner.
How to replace	1. Loosen the fixing bolt with a flat-blade driver. 2. Take out the inner filter, replace it, and fix it again with fixing bolt. 3. When replacing the filter, please install O-ring well as shown in the picture above.
Note	• Please check the filter periodically depending on the situation and replace it if necessary. • If foreign matter adheres to the filter due to long-term use, it may affect the control performance of the product. • Air filters can be reused by cleaning, but please replace the filter in case of oil contamination.

3.7 Orifice installation

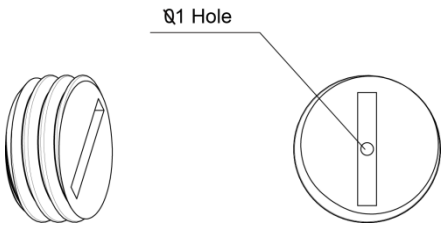

<Orifice>

Purpose
A normal action product does not need to install the orifice, but if the hunting phenomenon occurs after installation on a small actuator, it can be solved by installing an orifice to reduce the output flow of air pressure transmitted to the actuator from the positioner. The hole size of the orifice is 1mm.

How to install

As figure below, Install the orifice into OUT1 port, and fix it by turning it all the way with a flat-bladed screwdriver.

- When using for single type actuator, please install orifice to OUT1 port only.
- When using for double type actuator, please install orifice to both OUT1 and OUT2 ports.

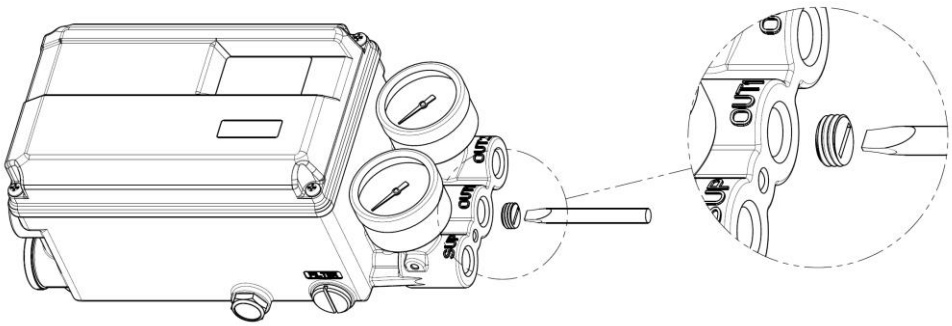

Note : Please contact us, if you need the above parts.

4 Pneumatic connection

4.1 Air pressure condition

⚠ NOTICE

- Use only dehumidified and dust-extracted compressed clean air.
- The air pressure input must be equipped with a regulator to supply constant air pressure.

4.2 Pneumatic port Description

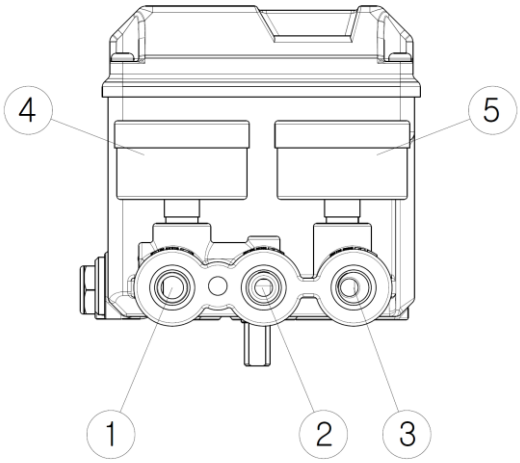

① Supply port

② OUT1 port

③ OUT2 port

④ OUT1 gauge

⑤ OUT2 gauge

4.3 Air connection

NOTICE

- This product is designed to increase the air pressure of OUT1 as 4 ~ 20mA current input signal increases.

4.3.1 TS700L air connection

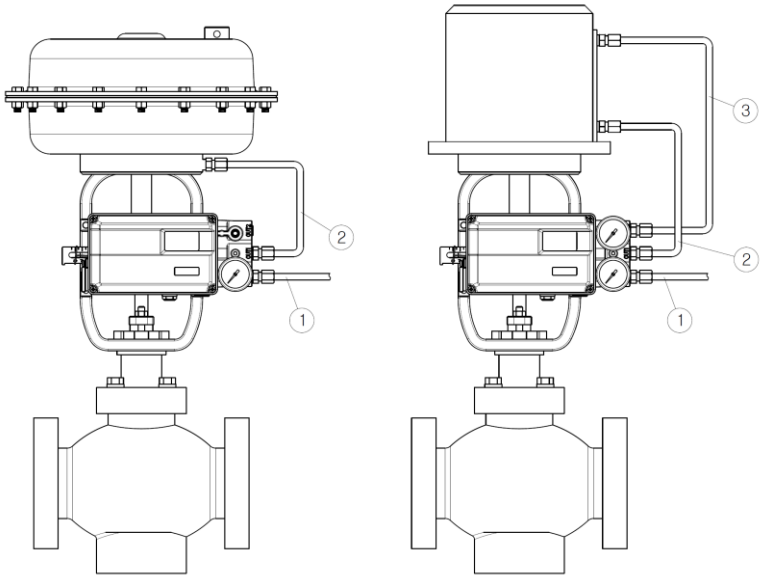

① Air supply

② OUT1

③ OUT2

4.3.2 TS700R air connection

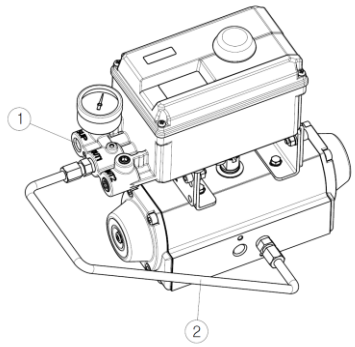

< Piping with single actuator >

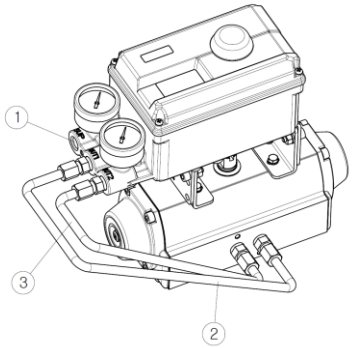

<Piping with double actuator>

① Air supply

② OUT1

③ OUT2

5 Electrical connection

⚠ WARNING

- Check that the input current is within the product specification range. Exceeding the rating might cause a malfunction to circuit boards or burn out electrical components.
- Check polarity of + and – exactly and connect wires.
- Separate the input current cable and the feedback signal cable correctly. Connecting the feedback signal cable to Power terminal for a long time may damage the main board.

5.1 Terminal description

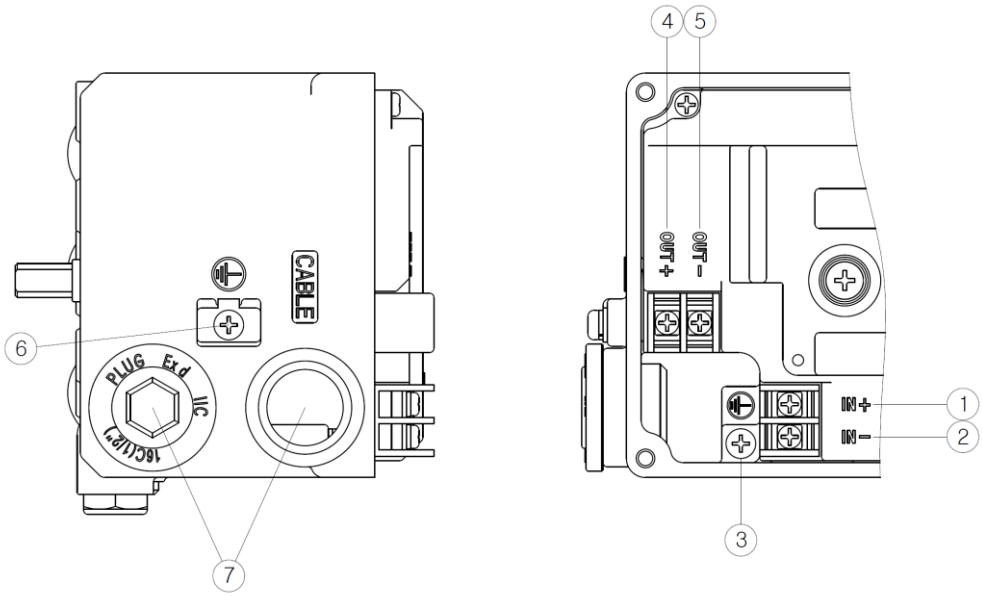

① Input signal (+)
② Input signal (-)
③ Internal ground
④ Feedback signal (+)
⑤ Feedback signal (-)
⑥ External ground bolt
⑦ Conduit

5.2 Wiring diagram

5.2.1 Power and feedback signal connection

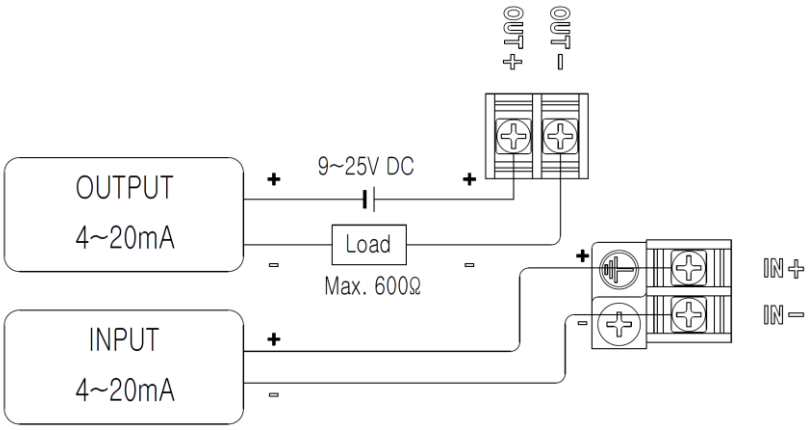

5.2.2 Mechanical Limit switch connection

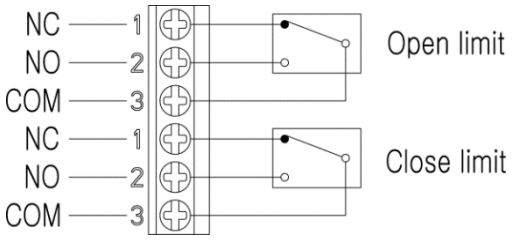

5.2.3 Proximity Limit switch connection

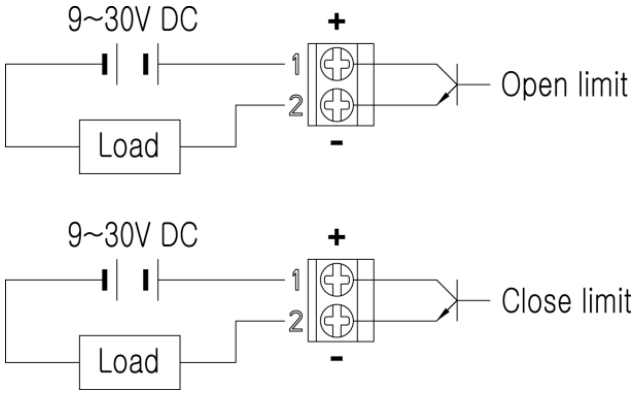

6 Calibration

6.1 LCD description

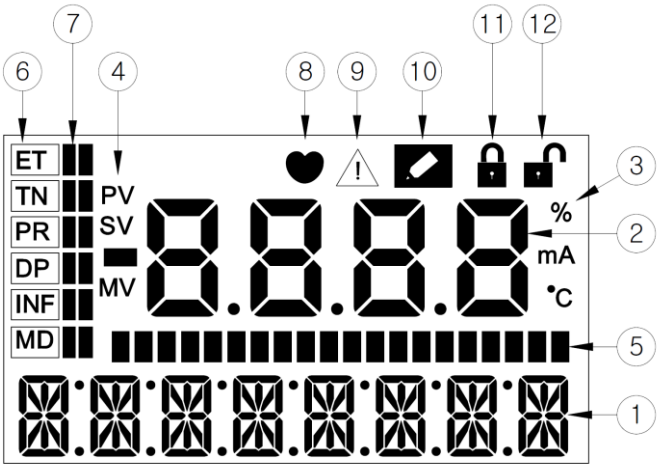

No.	Displayed contents	Description	
①	Menu information	Displays the running menu. (Main menu, Main parameter, Sub parameter)	
②	Menu value	Displays the present menu or parameter value.	
③	Menu value unit	Displays the present menu's value unit.	
④	Menu value symbol	**PV**	Progress value
		SV	Signal value
		MV	Motor control value
⑤	Progress bar	Displays the progress of the processor in bar form.	
⑥	Main parameter	Displays the currently selected main parameter.	
⑦	Parameter bar	Displays the position of the selected main parameter.	
⑧	HART communication	The icon is displayed when HART communication is in progress.	
⑨	Error code	The icon is displayed if there is an error during calibration or operation.	
⑩	Save	The icon is displayed when changing the internal setting values such as parameter modification.	
⑪	LOCK	The icon is displayed when the program is locked.	
⑫	UNLOCK	The icon is displayed when the program is unlocked.	

6.2 Button description

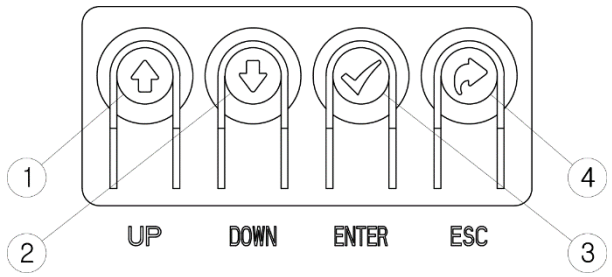

① UP button

② DOWN button

③ ENTER button

④ ESC button

Button	Function	Description
ENTER	**confirm**	• Execute the functions of the selected menu. • Save the modified parameter values.
ESC	**cancel**	• Move from the current menu to the upper level menu. • Cancel the current command.
UP	**move up**	• Move between menus of the same level such as main menu, main parameter, sub parameter. • Change the set value of the selected parameter to a larger value
DOWN	**move down**	• Move between menus of the same level such as main menu, main parameter, sub parameter. • Change the set value of the selected parameter to a small value

6.3 How to quickly perform Auto calibration

Open the cover of product and follow below steps to perform Auto calibration quickly.

① Please input current signal **18mA**, then press **<UP>** button for 3 seconds.
② The positioner automatically performs Auto calibration.
③ Auto Calibration is performed sequentially from STEP 1 to 7 on LCD, and may take 2-5 minutes depending on the valve size.

NOTICE

- If an error occurs during Auto calibration, please refer to Error codes on page 49 to 50.

6.3.1 Auto calibration Steps

When you progress auto calibration, it automatically proceed in the following steps below.

Steps	Description
STEP0	**Check ZERO point of the valve speed.** Check the reference point of valve stop.
STEP1	**Find ZERO point of the valve stroke.** The valve position after all the pneumatic pressure of actuator chamber connected to OUT1 port is exhausted is recognized as ZERO point.
STEP2	**Find END point of the valve stroke.** The valve position after the regulator setting pressure is supplied to actuator chamber connected to OUT1 port is recognized as END point.
STEP3	**Check the valve fully close time.** Measure the time of the valve takes from full open to full close.
STEP4	**Check the valve fully open time.** Measure the time of the valve takes from full close to full open.
STEP5	**Check the minimum valve movement** Measure the motor signal reference value, when the position of valve at 25%.
STEP6	**Check the minimum valve movement** Measure the motor signal reference value, when the position of valve at 50%.
STEP7	**Check the minimum valve movement** Measure the motor signal reference value, when the position of valve at 75%.

6.4 Software map

- To enter Main Parameter menu : Please input 4-20mA current signal and press **<ENTER>** button for 3 seconds after booting up.
- To enter Submenu : Press **<UP>** or **<DOWN>** button to select Main Parameter menu and press **<ENTER>** button.
- To select Submenu : Press **<UP>** or **<DOWN>** button.

Main parameter menu	TUNNING	PARAMETR	DEVICE P	INFOMATN	DIAGNOST	EMERGNCy
Submenu	AUTO RUN	DEAD bND	ACTU SNG	FIRM VER	ERR CODE	PASSWORD
	AM FULL	MIMLO LO	ACTU LIN	DEVI REV	AUTO CHK	EMGY NON
	ACT NORM	MINHI OP	FORCE OP	HART VER	PST RUN	FULL OP
	VAL OPCL	MINHI CL	FORCE CL	dEid	PST CFG	FULL CL
	VAL ZERO	CONST OP	DAMP	POLL ADD	PST REDy	STOP
	VAL END	CONST CL	SPLT ZER	TRAVEL K		UNLOCK
	OUT ZERO	CHAR LIN	SPLT END	OP TIME		
	OUT END	USER DEF	COMPENSA	CL TIME		
	IN ZERO		ACT NORM			
	IN END		OUT NORM			
	OUTP ZER		HT NORM			
	OUTP END		DSP NORM			

6.5 Main menu description

After the product is booted, **<MAIN LIN>** is displayed, which shows the current opening of the valve. Press **<UP>** or **<DOWN>** button to move to the following menu and check the corresponding information.

In Main menu, information such as the valve opening and the magnitude of the input current signal can be checked and the execution of the command or the modification of the parameter value cannot be performed.

<table>
<tr><th>Main menu</th><th colspan="2">Description</th></tr>
<tr><td rowspan="7">MAIN LIN</td><td colspan="2">Display the percentage of current valve opening value.
Depending on the set value of the flow characteristics, one of the following values is displayed.</td></tr>
<tr><td>LCD display value</td><td>Flow characteristics</td></tr>
<tr><td>MAIN LIN</td><td>Linear</td></tr>
<tr><td>MAIN EQ1</td><td>EQ1 (1/25)</td></tr>
<tr><td>MAIN EQ2</td><td>EQ2 (1/50)</td></tr>
<tr><td>MAIN QO</td><td>Quick Open</td></tr>
<tr><td>MAIN USR</td><td>User defined 17 points</td></tr>
<tr><td>MAIN IN %</td><td colspan="2">Display the magnitude of input signal that the positioner recognizes as percentage.
• If the size of the input signal recognized by the positioner differs from output signal of the DCS or calibrator, check the voltage of the power supply.
• If the supply current is normal, please reset IN ZERO> and IN END> settings in TUNING> of main parameter.</td></tr>
<tr><td>MAIN IN mA</td><td colspan="2">Display the magnitude of input signal that the positioner recognizes as mA.
• If the size of the input signal recognized by the positioner differs from output signal of the DCS or calibrator, check the voltage of the power supply.
• If the supply current is normal, please reset IN ZERO> and IN END> settings in TUNNING> of main parameter.</td></tr>
<tr><td>MAIN VEL</td><td colspan="2">Display currently operating speed of the valve as numbers.
• As the value, between -2047 to +2048, negative numbers indicate speed at close, and positive numbers indicate speed at open.
• 0 means stop and the larger the absolute value, the faster the speed.</td></tr>
<tr><td>MAIN DEV %</td><td colspan="2">Display the percentage of error between the current input signal and valve opening value.
• The larger the error, the lower the control characteristic.</td></tr>
<tr><td>MAIN TEM</td><td colspan="2">Display the current ambient temperature.</td></tr>
<tr><td>MAIN KPR</td><td colspan="2">Display the pressure level of the pneumatic pressure output to OUT1 port.
It is displayed only on product equipped with an optional pressure sensor.</td></tr>
</table>

6.6 Main parameter menu Description

Main parameter menu corresponds to main menu in which various parameters are classified by function.

- After the product is booted, press **<ENTER>** button for 3 seconds to enter Main Parameter menu.
- Main parameter menu is classified as below and can be moved by pressing **<UP>** or **<DOWN>** button.
- Press **<ENTER>** button in the corresponding menu to enter Submenu.

Main parameter menu	Main function
TUNNING	• Run Auto calibration. • Change Zero and Span of the valve manually. • Change Zero and Span of feedback signal manually.
PARAMETR	• Set Dead band. • Change PID values. • Change flow characteristics.
DEVICE P	• Set Single/Double according to actuator type. • Set Linear/Rotary according to actuator type. • Set signal point of Force Open/Close. • Set acting type. (Direct Action / Reverse Action) • Set the valve acting speed. (DAMP)
INFOMATN	• Display the product model. • Display the device and HART version. • Display Full Open/Close time. • Display the current ambient temperature, the recorded maximum ambient temperature, and the recorded minimum ambient temperature.
DIAGNOST	• Display the error code. • Auto check function. • Set PST function.
EMERGNCy	• Set Password. • In case of emergency, set function to forcibly open the valve, or close valve, or maintain current position. • Set Lock and Unlock function.

6.7 Submenu Description

The following is a detailed description of Main parameter menu's Submenu.

- Press <**ENTER**> button in Main parameter menu to enter Submenu.
- Use <**UP**> and <**DOWN**> button to move between Submenu.

6.7.1 TUNNING

<table>
<tr><th>Submenu</th><th colspan="2">Description</th></tr>
<tr><td>AUTO RUN</td><td colspan="2">Run Auto calibration.
• Executable from any input signal between 4 and 20 mA.
• It takes 1~3 minutes, depending on the valve size.</td></tr>
<tr><td rowspan="7">AM</td><td colspan="2">Select Auto calibration mode.</td></tr>
<tr><th>Mode</th><th>Description</th></tr>
<tr><td>AM FULL</td><td>Set all parameter values again.</td></tr>
<tr><td>AM WDTH</td><td>Reset MIMLO OP and MINHI CL values(which are PIEZO control characteristic parameters).</td></tr>
<tr><td>AM OPCL</td><td>Reset CONST OP and CONST CL values(which are PIEZO control characteristic parameters).</td></tr>
<tr><td>AM ZEb R</td><td>Only reset End point and Zero point of the valve, but the other parameter values are not modified.</td></tr>
<tr><td>Factory setting</td><td>AM FULL</td></tr>
<tr><td rowspan="6">ACT NORM</td><td colspan="2">Set the sensitivity of product.
The setting value can be changed when hunting occurs due to a large friction of the valve stem or a small actuator size.</td></tr>
<tr><th>Mode</th><th>Description</th></tr>
<tr><td>ACT NORM</td><td>Normal setting</td></tr>
<tr><td>ACT LAGR</td><td>Select when actuator size is too big</td></tr>
<tr><td>ACT FRIC</td><td>Select when the valve friction is too big</td></tr>
<tr><td>Factory setting</td><td>ACT NORM</td></tr>
<tr><td>VAL OPCL</td><td colspan="2">Regardless of the current signal, it performs the function of opening and closing the valve with UP or DOWN button manually.</td></tr>
<tr><td>VAL ZERO</td><td colspan="2">Reset ZERO point of the valve manually.
Input 4mA current, press UP and DOWN button to change the valve position, and press ENTERbutton to save the current valve position, then the positioner recognizes the current position as valve ZERO point.</td></tr>
<tr><td>VAL END</td><td colspan="2">Reset END point of the valve manually.
Input 20mA current, press UP and DOWN button to change the valve position, and press ENTERbutton to save the current valve position, then the positioner recognizes the current position as valve END point.</td></tr>
</table>

OUT ZERO	Reset ZERO point of the feedback signal manually. Input **4mA** current signal, valve reaches Zero position, after press <**UP**> or <**DOWN**> button to adjust the value, until the 4mA feedback signal is output, and then press <**ENTER**>button to save.
	⚠ **NOTICE**
	Please reset **OUT ZERO** setting after installing feedback module.
OUT END	Reset END point of the feedback signal manually. Input **20mA** current signal, valve reaches end position, after press <**UP**> or <**DOWN**> button to adjust the value, until the 20mA feedback signal is output, and then press <**ENTER**> button to save.
	⚠ **NOTICE**
	Please reset **OUT END** setting after installing feedback module.
IN ZERO	Reset ZERO value of input signal manually. If <**MAIN IN%**> and <**MAIN mA**> displayed at Main menu differ from the actual input signal, conduct the commands of this menu. Input 4mA current at this menu and press <**ENTER**> button twice to save.
	⚠ **NOTICE**
	After replacing the main board or conduct program initialization, please reset **IN ZERO** setting.
IN END	Reset END value of input signal manually. If <**MAIN IN%>** and <**MAIN mA**> displayed in Main menu differ from the actual input signal, conduct the commands of this menu. Input **20mA** current at this menu and press <**ENTER**> button twice to save.
	⚠ **NOTICE**
	After replacing the main board or conduct program initialization, please reset **IN END** setting.
OUTP ZER	Reset ZERO value of the pressure sensor manually. At Zero point of the valve, press <**UP**> or <**DOWN**> button to adjust the output pressure value, and press <**ENTER**> button to save.
OURP END	Reset END value of the pressure sensor manually. At END point of the valve, press <**UP**> or <**DOWN**> button to adjust the output pressure value, and press <**ENTER**> button to save.

6.7.2 PARAMETR

Submenu	Description	
DEAD bND	Dead band range, the range of allowable control error. • If hunting or oscillation occurs due to high packing friction of the valve, the problem can be solved by increasing the value within the range allowed by the field. • If the value is set too high, the accuracy may be reduced.	
	Range	0~10%
	Factory setting	0.3%
MIMLO LO	Display OFF time of PIEZO valve output current. • If increase the time, can solve hunting or oscillation problem but positioner finds the target point slowly. • If reduce the time, the positioner finds the target point quickly but it is more likely to happen hunting or oscillation.	
	Range	1~500
MINHI OP	Display ON time of PIEZO valve output current when the valve open. • If increase the time, the positioner finds the target point quickly but it is more likely to happen hunting or oscillation. • If reduce the time, can solve hunting or oscillation problem but positioner finds the target point slowly.	
	Range	1~500
MINHI CL	Display ON time of PIEZO valve output current when the valve close. • If increase the time, the positioner finds the target point quickly but it is more likely to happen hunting or oscillation. • If reduce the time, can solve hunting or oscillation problem but positioner finds the target point slowly.	
	Range	1~500
CONST OP	Display the proportional constant value of PIEZO valve output current to reach the target point when the valve open. • If increase the value, can solve hunting or oscillation problem but positioner finds the target point slowly. • If reduce the value, the positioner finds the target point quickly but it is more likely to happen hunting or oscillation.	
	Range	0.1~5.0
CONST CL	Display the proportional constant value of PIEZO valve output current to reach the target point when the valve close. • If increase the value, can solve hunting or oscillation problem but positioner finds the target point slowly. • If reduce the value, the positioner finds the target point quickly but it is more likely to happen hunting or oscillation.	
	Range	0.1~5.0

CHAR LIN

Set the characteristics of the valve control.

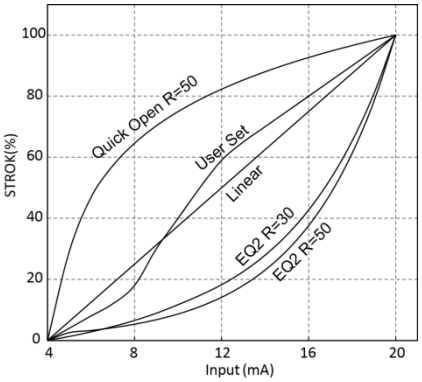

Input (mA)	Linear (%)	EQ1 (%)	EQ2 (%)	QO (%)	USER (%)
4	0	0	0	0	0
5	6.25	2.55	1.31	29.13	4
6	12.5	3.26	2.81	46.84	8
7	18.75	4.16	4.54	57.21	12
8	25	5.32	6.55	64.56	18
9	31.25	6.79	8.92	70.27	30
10	37.5	8.67	11.73	74.93	40
11	43.75	11.07	14.76	78.87	50
12	50	14.14	18.26	82.28	59
13	56.25	18.06	22.58	85.29	65
14	62.5	23.06	27.93	87.99	70
15	68.75	29.45	34.55	90.42	75
16	75	37.61	42.73	92.65	80
17	81.25	48.02	52.85	94.69	85
18	87.5	61.32	65.37	96.59	90
19	93.75	78.31	80.85	98.35	95
20	100	100	100	100	100

Mode	**CHAR LIN**	Linear
	CHAR EQ1	Equal percentage (1/25)
	CHAR EQ2	Equal percentage (1/50)
	CHAR QUI	Quick Open
	CHAR USR	User defined 17 points
Factory setting	**CHAR LIN**	

USER DEF

Run the special flow curve by user-defined 17 points.

- In addition to the above Linear, Equal percentage, Quick open and other typical flow characteristics, the user can set the 4~20mA corresponding valve stroke position to achieve special flow curve control.
- To run this function, **<CHAR USR>** must be set at **<CHAR>** menu.

Steps	Description
***USR P0**	Set the valve position when the input signal is 4 mA.
***USE P1**	Set the valve position when the input signal is 5 mA.
***USR P2**	Set the valve position when the input signal is 6 mA.
***USR P3~16**	Follow above steps for setting the valve position when the input signal is 7~19mA .
***USR P17**	Set the valve position when the input signal is 20 mA.

6.7.3 DEVICE P

<table>
<tr><th>Submenu</th><th colspan="3">Description</th></tr>
<tr><td rowspan="8">ACTU SNG</td><td colspan="3">Depending on the actuator type, it should be set to Single or Double manually.</td></tr>
<tr><td colspan="3">⚠ NOTICE</td></tr>
<tr><td colspan="3">If the setting differs from the actuator type, the control characteristic may be degraded.</td></tr>
<tr><td rowspan="2">Mode</td><td>ACTU SNG</td><td>Single type</td></tr>
<tr><td>ACTU DbL</td><td>Double type</td></tr>
<tr><td rowspan="2">Factory setting</td><td>TS700L</td><td>ACTU SNG</td></tr>
<tr><td>TS700R</td><td>ACTU DbL</td></tr>
<tr><td rowspan="8">ACTU LIN</td><td colspan="3">Depending on the actuator type, it should be set to Linear or Rotary manually.</td></tr>
<tr><td colspan="3">⚠ NOTICE</td></tr>
<tr><td colspan="3">If the setting differs from the actuator type, the control characteristic may be degraded.</td></tr>
<tr><td rowspan="2">Mode</td><td>ACTU LIN</td><td>Linear type</td></tr>
<tr><td>ACTU ROT</td><td>Rotary type</td></tr>
<tr><td rowspan="2">Factory setting</td><td>TS700L</td><td>ACTU LIN</td></tr>
<tr><td>TS700R</td><td>ACTU ROT</td></tr>
<tr><td rowspan="5">FORCE OP</td><td colspan="3">When the input signal is higher than the set value, the valve is forced to open. This parameter is used to move the valve into its seat with the maximum force of the actuator.
 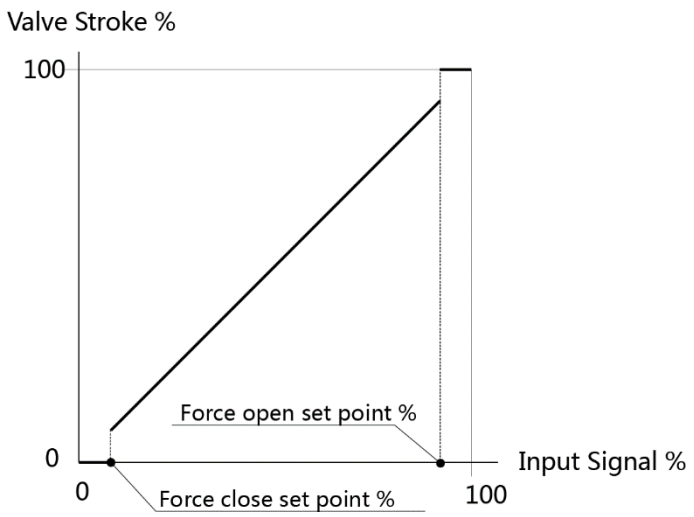
</td></tr>
<tr><td>Range</td><td colspan="2">0~100%</td></tr>
<tr><td rowspan="2">Factory setting</td><td>TS700L</td><td>100%</td></tr>
<tr><td>TS700R</td><td>99.7%</td></tr>
<tr><td>Note</td><td colspan="2">When the value set to 100%, this function is not applied.</td></tr>
</table>

FORCE CL	When the input current signal is lower than the set value, the valve is forced to close. • When the valve is closed, residual pressure in the actuator chamber can be completely released.	
	Range	0~100%
	Factory setting	0.3%
	Note	When the value set to 0%, this function is not applied.
DAMP	This function controls the operating speed of the valve. • The higher the set value, the slower the operating speed of the valve. • With this function, hunting problem in small actuator can be solved.	
	Range	0~500
	Factory setting	0
	Note	When the value set to 0, this function is not applied.
SPLIT ZER	Set Zero point of the signal value during the split range control. For example, if the set value is 50%, 12mA corresponds to 0% of the valve opening as shown on the right figure . 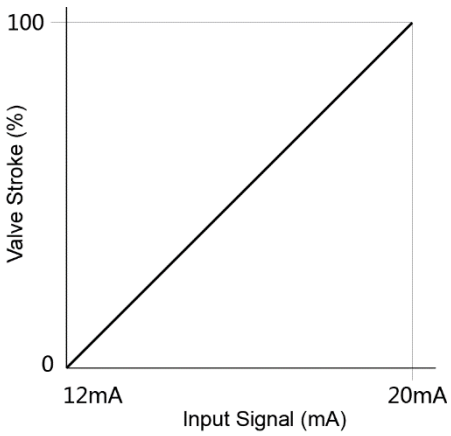	
	Range	0~100.0%
	Factory setting	0.0%
SPLIT END	Set End point of the signal value during the split range control. For example, if the set value is 50%, 12mA corresponds to 100% of the valve opening as shown on the right figure . 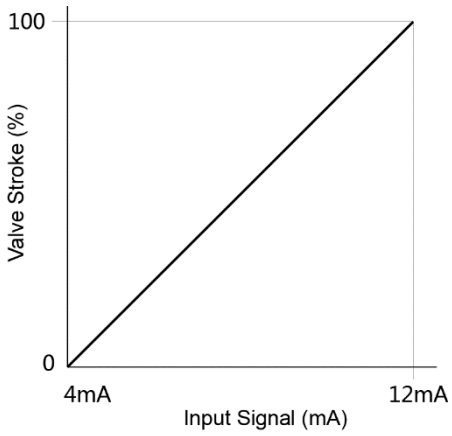	
	Range	0~100.0%
	Factory setting	100.0%

COMPENSA	This parameter corrects the error between LCD value and actual valve opening.		
	⚠NOTICE		
	This function should only be used with Linear type products and Rotary products must be set to 0%.		
	Range	-50.0~50.0%	
	Factory setting	TS700L(Linear type)	3.0%
		TS700R(Rotary type)	0.0%

ACT NORM

Change the action mode of the valve.

Reverse Action	Direct Action
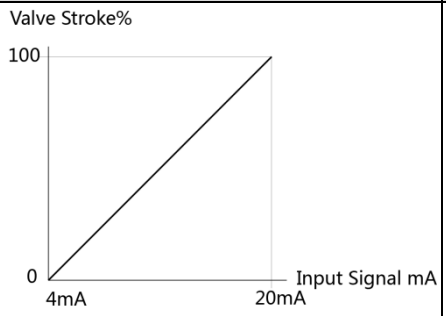	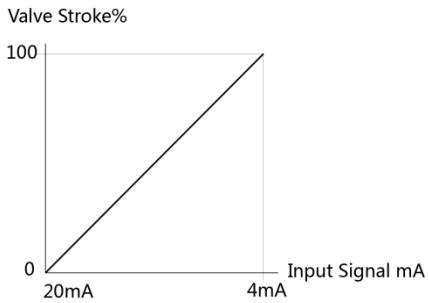

Mode	**ACT NORM**	Reverse Action
	ACT REVE	Direct Action
Factory setting	**ACT NORM**	

OUT NORM

Change the output mode of feedback signal to the same percentage as the valve stroke, or the opposite percentage.

Normal	Reverse
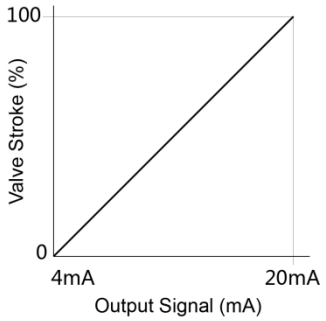	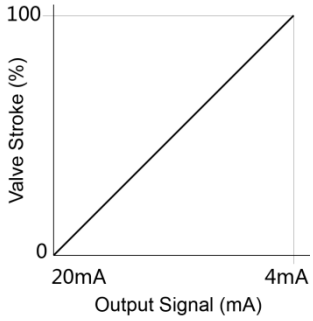

Mode	**OUT NORM**	Normal action
	OUT REVE	Reverse action
Factory setting	**OUT NORM**	

HT NORMR

Change the display mode of the valve opening transmitted through HART communication.

Mode	**HT NORMR**	Direct action
	HT REVER	Reverse action
Factory setting	**HT NORMR**	

DSP NORM	Change the display mode of the valve opening on LCD.	
	Mode	Description
	DSP NORM	Displayed 0% on LCD when the valve is 0%, and displayed 100% on LCD when the valve is 100%.
	DSP REVE	Displayed 100% on LCD when the valve is 0%, and displayed 0% on LCD when the valve is 100%.
	Factory setting	**DSP NORM**

6.7.4 INFOMATN

You can find the following information through Submenu.

Submenu	Description
FIRM VER	Display firmware version of the product.
DEVI REV	Display the version of device.
HART VER	Display the version of HART communication.
dEid	Display HART Device ID number
POLL ADD	Display Polling address of the device in HART communication.
TRAVEL K	Display the accumulated total travel distance of the valve after the positioner has been used. (Unit: K%) One full travel distance from full close to full open means 100% = 0.001K% For example, if the travel value is 1K%, this means that the valve has moved 1000 stroke percentages.
OP TIME	Display the time that takes from the valve fully close to fully open during Auto calibration. Unit : Second
CL TIME	Display the time that takes from the valve fully open to fully close during Auto calibration. Unit : Second

6.7.5 DIAGNOST

<table>
<tr><th>Submenu</th><th colspan="2">Description</th></tr>
<tr><td>ERR CODE</td><td colspan="2">Display error code of the product.
You can check the error code to resolve the problem.
For details, please refer to Page 51.</td></tr>
<tr><td rowspan="5">AUTO CHK</td><td colspan="2">Self-diagnosis function checks the installation status of the product, internal gear, pneumatic tube connection, etc.</td></tr>
<tr><td>Error code</td><td>Description</td></tr>
<tr><td>PNEUMATIC</td><td>No pneumatic output to OUT port.</td></tr>
<tr><td>POTENMTR</td><td>Main shaft gear and Potentiometer gear are dislocated due to external shocks, etc.</td></tr>
<tr><td>SIZE ANGLE</td><td>Display rotation angle of the lever of the product. Installation problems do not occur frequently for Rotary product. However, for linear product, the angle of the product may be bigger or less than the effective angle(60º) depending on bracket and the position of lever connection. If displayed number is less than 40º, please refer to page 15-17 to correctly install the product again.</td></tr>
<tr><td>COMPENSATE</td><td>Display the optimal compensation value based on the current rotation angle.</td></tr>
<tr><td rowspan="2">PST RUN</td><td colspan="2">Run PST function according to the following PST CFG configuration.</td></tr>
<tr><td>What is PST?</td><td>Partial stroke testing (or PST), within the range of not affecting to the flow process, PST prevents the valve stem from sticking by moving the valve finely according to the set value and the period. In case of emergency, it can make the valve operate normally.</td></tr>
<tr><td>PST CFG</td><td colspan="2">Set necessary items to execute PST function.
Submenu of PST CFG is as follow.
 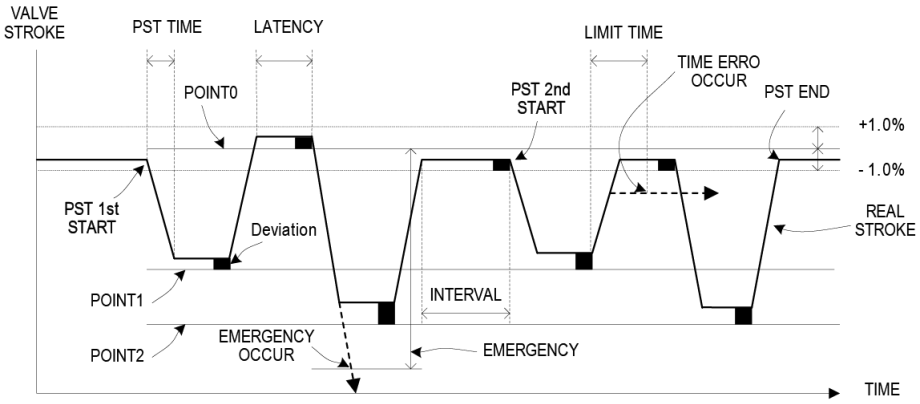
</td></tr>
</table>

	Submenu	Description	
	0P POINT	Set the initial valve position for PST to start. Valve initial position must be within ±1% from "**0S POINT**". If not, wait until this condition is satisfied.	
		Default value	100%
		Range	0~100%
	1S POINT	Set 1st target position of PST.	
		Default value	90%
		Range	0~100%
	2N POINT	Set 2nd target position of PST.	
		Default value	80%
		Range	0~100%
	INTERVAL	Set the waiting time after the first PST is end and before the second PST start.	
		Default value	20 (Seconds)
		Range	1~100 (Seconds)
	LATENCY	Set the waiting time from "**1S POINT**" to "**2N POINT**" start. After reaching the first target point "**1S POINT**", return to the initial position, wait for "**LATENCY**" time specified by the user, and then move to the second "**2S POINT**" target point again.	
		Default value	10 (Seconds)
		Range	1~100 (Seconds)
	LMT TIME	Set the time allowed to reach the target point. If the time to reach the target value during the PST execution exceeds "**LMT TIME**" time or there is no movement, PST is considered to have failed and PST is immediately interrupted.	
		Default value	50 (Seconds)
		Range	1~100 (Seconds)
	EMERGNCY	In PST process, if the valve position exceeds "**EMERGNCY**" set value, PST function is stopped.	
		Default value	15%
		Range	0~100%
PST REDy	Check PST function execution result value. The following information is displayed on LCD based on the set values and the execution results. See the table below to confirm PST execution result information.		
	Result Value	**PST REDy**	Ready to run PST.
		PST SUCS	PST success.

		PST TOUT	"LMT TIME" failed to reach the target value within the set time value range.
		PST FIXD	Valve has no action.
		PST DOUT	Exceed the target value more than 1%.
		PST EMRG	When allowable range of valve movement, i.e. "EMERGENCY" value is exceeded.

6.7.6 EMERGNCy

Submenu	Description		
PASSWORD	Must put a password to enter this menu. The password is set at the factory and cannot be changed by the user.		
	Factory setting	Press **UP > ENTER > DOWN > UP** button sequentially. (1321 on LCD)	
EMGY NON	Set the position of the valve to be moved when an abnormality of the positioner is detected. (If priority value of error code is “0”) (refer to page 51)		
	Mode	**EMGy NON**	Do not take any action.
		EMGy OP	Open the valve fully.
		EMGy CL	Close the valve fully.
		EMGy STP	Stop the valve operation.
	Factory setting	**EMGy NON**	
FULL OP	Open the valve fully by manual regardless of the input signal.		
FULL CL	Close the valve fully by manual regardless of the input signal.		
STOP	Maintain the present valve position regardless of the input signal.		
UNLOCK	It locks to prevent changing all parameter values. When set to “**LOCK**”, all commands such as Auto calibration, PID changes, and parameter values settings cannot be changed.		
	Mode	**LOCK**	Lock the program
		UNLOCK	Unlock the program
	Factory setting	**UNLOCK**	

7 Error code and Troubleshooting

7.1 Error code during Auto calibration

- Error code as below is displayed on LCD if an error occurs during Auto calibration.
- Check the error code and refer to the table below to solve the problem.

No	Error Code	Cause	Solution
1	**STEP0 V0**	Displayed when the valve does not stop after a long period of time when the data is measured to detect the first stop of the valve during auto calibration. And it is mainly caused by damage to Main board.	• Replace Main PCB.
2	**STEP1 PZ**	Displayed when Zero point is lower than allowable range.	• Check the status of the positioner installation or reinstall the positioner. • Set initial angle (Zero point) of the lever higher than the current status.
3	**STEP2 PE**	Displayed when End point is higher than allowable range.	• Check the installation status of the positioner or reinstall the positioner. • Set final angle (End point) of the lever lower than the current status.
4	**ACT TYPE**	Displayed when Zero point and End point of the lever are too close or equal.	• Check the status of supply air. • Unplug the potentiometer cable in the positioner and reconnect it to Main board. • Check the status of feedback lever installation. And set the operation angle that between initial angle(Zero point) and final angle(End point) over 40 degree. • Replace Main PCB.
5	**STEP3 CT**	Displayed when Close time is too long during auto calibration.	• Check the status of feedback lever installation. • If Zero point of the valve changes, please conduct auto calibration 2~3 times. • If the actuator size is too big, please set **ACT** mode as **ACT LAGR** and conduct auto calibration again. (Refer to page37)

6	**STEP4 OT**	Displayed when Open time is too long during auto calibration.	• Check the status of feedback lever installation. • If the actuator size is too big, please set **ACT** value as **ACT LAGR** and conduct auto calibration again. (Refer to page37)
7	**STEP5 WD**	Displayed when the positioner can't find the accurate position within the allowed time.	• Check the status of feedback lever installation. • If the actuator size is too big, please set **ACT** value as **ACT LAGR** and conduct auto calibration again. (Refer to page37)
8	**DEAD ZNE**	Displayed when the feedback value of potentiometer is out of allowed range.	• Check if the potentiometer is out of zero adjustment with the gear (vibration or external shock is the cause). • Potentiometer is damaged. (please replace the potentiometer)
9	**ERR**	Displayed when auto calibration failed due to other unknown reasons.	• Replace the positioner.

7.2 Error code during operation

- If there is a problem during the operation, please enter "**ERR CODE**" which is Submenu of "**DIAGNOST**" to check the error code.
- Check the error code and refer to the table below to solve the problem.

No	Code	priority	Cause	Solution
1	**L**	1	Valve End point is set too high	• Check whether the positioner is installed too high or low. • Check whether the positioner is installed too far from the actuator. (Check the angle of use) • Check the potentiometer gear and main gear are out of position. (The cause of the problem is strong vibration or external shock).
2	**K**	1	Valve Zero point is set too low	• Check whether the positioner is installed too high or low. • Check whether the positioner is installed too far from the actuator. (Check the angle of use) • Check the potentiometer gear and main gear are out of position. (The cause of the problem is strong vibration or external shock).
3	**J**	1	Valve End and Zero points are set too close. (Use angle is too small)	• Increase the angle of use by repositioning the positioner closer to the actuator.
4	**I**	1	Input current is below 3.8mA	• Check input current signal
5	**H**	1	Input current is over 22mA	• Check input current signal
6	**G**	1	BIAS value exceeds limit	• Run Auto-Calibration again (Accuracy is significantly reduced when used without auto-calibration)
7	**F**	1	Ambient temperature is too high	• Check ambient temperature
8	**E**	1	Ambient temperature is too low	• Check ambient temperature
9	**D**	1	Used over 100,000 cycles	• Check positioner regularly
10	**C**	0	Used over 500,000 cycles	• Check positioner regularly
11	**B**	0	Used over 1million cycles	• Replace positioner
12	**A**	0	EEPROM is damaged	• Replace PCB

Solutions for Control Valve Accessories

Tissin Co.,Ltd.

201-1105, No 397, Seokcheon-ro, Ojeong-gu,

Bucheon-si, Gyeonggi-do, Korea 14449

Tel : +82-32-624-4573,

Fax : +82-32-624-4574

www.tissin.co.kr