Smart Valve Positioner

TS900/TS905 Series

Instruction Manual

Tissin Co.,Ltd.

Ver. PM-TS900EN-09/2023

Table of Contents

1 Introduction

1.1 General information for the user

This instruction includes installation, operation, maintenance, and parts information for Tissin TS900 Valve Positioner. Keep these instructions in a location which is easily accessible to every user and make these instructions available to every new owner of the device.

- Installation, commissioning and maintenance of the product can only be performed by trained specialist personnel who have been authorized by the plant operator to do so.
- To avoid possible injury to the personnel or damage to valve parts, WARNING, CAUTION and NOTICE must be strictly followed.
- Before installing or commissioning, be sure to read and thoroughly understand the product manual and operate the product properly.
- Operators must strictly observe the applicable national regulations with regards to installation, function tests, repairs, and maintenance of electrical products.
- For additional information or if specific problems occur that are not explained in these instructions, contact the manufacturer.

1.2 Limited warranty and disclaimer

- This product has been fully inspected and shipped through a thorough quality inspection procedure. The manufacturer warranty period of the product is 18 months after the product is shipped from Tissin in Korea.
- For any failure or damage reported within the warranty period which is clearly our responsibility, a replacement product or necessary parts will be provided. This limited warranty applies only to our product independently, and not to any other damage incurred due to the failure of the product.
- Using the device in a manner that does not fall within the scope of its intended use, disregarding this manual, using under unqualified personnel, or making unauthorized alterations releases the manufacturer from liability for any resulting damage. This renders the manufacturer's warranty null and void.

1.3 Requirements for safety

This manual contains notices you have to observe in order to ensure your personal safety, as well as to prevent damage to property. These safety instructions are intended to prevent hazardous situations and/or equipment damage. For the safety, it is important to follow the instructions in the manual.

WARNING

Failure to observe the warning may result in serious injuries or death.

CAUTION

Failure to observe this warning may result in damage to the device or personal injury.

NOTICE

Failure to observe the warning may result in damage to the device or may degrade performance.

Safety notes

CAUTION

- Only trained and authorized person should operate the machinery and the equipment.
- Do not use this positioner out of the range of its specifications as this can cause failure.
- Do not service or attempt to remove product and machinery/equipment until safety is confirmed.
- Never handle mechanical equipment or disassemble the device until safety is confirmed.
- Before loosening the pneumatic lines and valves, please turn off the pressure and vent the pneumatic lines.
- Before reaching into the device or the equipment, please switch off the power supply and secure to prevent reactivation.
- Observe applicable accident prevention and the safety regulations for electrical equipment.

1.4 Certificate

This product has obtained a variety of explosion-proof certification and safety level certification. For details, please visit our website and download the corresponding explosion-proof certificate for confirmation.

Certificate		Certificate number	Explosion proof grade
	IECEx	IECEx EPS 19.0052X	Ex db IIC T5/T6 Gb Ex tb IIIC T100℃/T85℃ Db IP66
	ATEX	EPS 19 ATEX 1 112 X	II 2G Ex db IIC T5/T6 Gb II 2D Ex tb IIIC T100℃/T85℃ Db IP66
	EAC	RU C-KR.АД07.B.01961/20	1Ex d IIC T5/T6 Gb Ex tb IIIC T100℃/T85℃ Db
	KCS	18-KA2BO-0294X	Ex d IIC T6/T5
	CCC	2020322307000493	Ex db IIC T5/T6 Gb Ex tb IIIC T85℃/T100℃ Db
	NEPSI	GYJ23.1057X	Ex db IIC T5/T6 Gb Ex tb IIIC T85℃/T100℃ Db
SIL	**SIL**	FS/71/220/19/0378 (SGS TUV SAAR)	SIL2 at HFT=0 SIL3 at HFT=1
	CSA	Evaluation is in progess	CL I, DIV 2, GP ABCD; T5…T6 Ex db IIC T5…T6 Gb CL I, ZN 1 AEx db IIC T5…T6 Gb CL II, DIV 2, GP EFG; T100°C…T85°C ; CL III Ex tb IIIC T100°C…T85°C Db ZN 21 AEx tb IIIC T100°C…T85°C Db

1.5 Basic safety instructions for use in the Ex area

To prevent the risk of explosion, observe not only the basic safety instructions in the respective operating instructions for operation in the Ex area, but also the following.

⚠ WARNING

- Make sure that the device is suitable for the area of use. Available in Zones 1 and Zone2.
- Check the positioner's certified and permitted explosion proof range.
- Close all unnecessary cable glands with lock screws approved for the explosions area.
- Do not remove terminal cover in a hazardous location while the power is on.
- Covers for the terminal and body should be in place while operating.
- Install cables and conduit connections must accordance with IEC60079-14.
- Ring terminal with surface area of more than 0.195mm^2 with M4 spring washer should be used when connect the power.
- For external ground terminal, ring terminal with surface area of more than 5.5 mm^2 should be used.
- The external control unit should be installed a fuse with a rated short-circuit of current of less than 62mA.
- Do not disassemble the bolts and parts shown below when the power is connected.

Specific Conditions for Use

① When installed in explosive gas atmosphere, separate cable gland with marking of Ex d IIC Gb in accordance with IEC 60079-0:2011 and IEC 6001:2004 shall be incorporated.

② When installed in combustible dust atmosphere, separate cable gland with marking of Ex tb IIIC Db in accordance with IEC 60079-0:2011 and IEC 60079-31:2013 shall be incorporated.

③ Contact the original manufacturer for the information of flameproof joint dimension and fasteners (A2-70).

④ The relation between temperature class, ambient temperature and process medium temperature is following.

Temperature class		Ambient temperature
T6	T85℃	(-40~+70) ℃
T5	T100℃	(-40~+80) ℃

2 Product Description

2.1 Function

Smart valve positioner TS900 series controls the valve stroke in response to an input signal of 4~20mA DC from the control panel, DCS or calibrator.

2.2 Features

- LCD and 4 button local control
- Quick and easy calibration
- PST and alarm function
- Auto/Manual switch included
- Built-in self-diagnostic function
- Modularization of the internal parts
- IP66 / NEMA4X
- Improvement of valve control speed by applying large flow pilot valve
- Strong vibration resistance and impact resistance

2.3 Options

- Position transmitter (4~20mA DC Feedback signal)
- HART communication (Ver. HART 7)
- Alarm switch

2.4 Applications

TS900 is mounted on a pneumatic control valves and is used for fluid control of industrial parts.

- Oil and gas
- Chemicals
- Power plant
- Paper
- Water treatment
- Pharmaceutical
- Printing and dyeing processing
- Food and beverage
- Etc.

2.5 Label

Label	Item	Description
Body label	**Ex db IIC T5/T6 Gb** **Ex tb IIIC T100℃/T85℃ Db**	Indicates certified explosion proof grade.
	-40℃≤Ta≤ 80℃(T5) **-40℃≤Ta≤ 70℃(T6)**	Indicates the ambient temperature range for the explosion proof. This temperature range must be observed when using in explosion-proof areas.
	INPUT SIGNAL	Indicates input current signal range.
	SUPPLY PRESSURE	Indicates the allowable input supply pressure range.
	WEATHER PROOF	Indicates the enclosure grade.
Cover label	**Model No.**	Indicates the model number.
	Serial No.	Indicates the serial number.
	Operating Temp.	Indicates the allowable operating temperature.

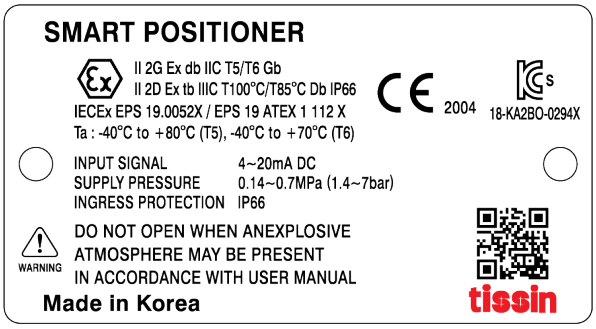

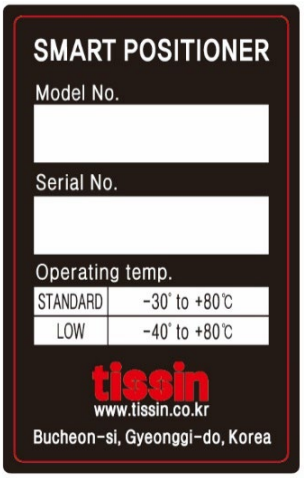

<For KCs, ATEX & IECEx approval >

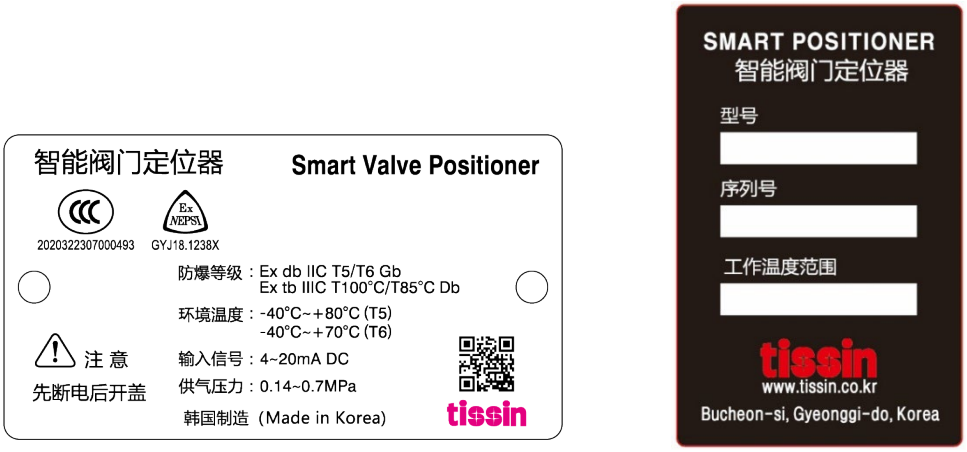

<For NEPSI, CCC approval >

<For EAC approval >

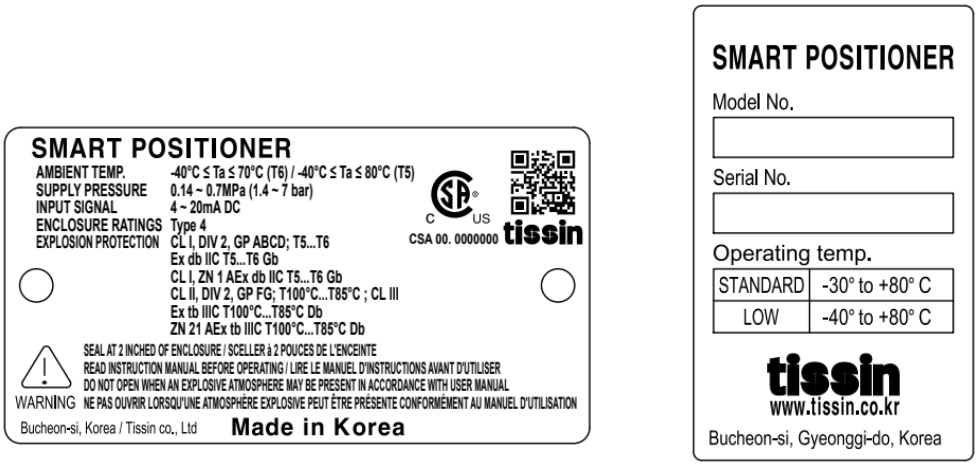

<For CSA approval >

2.6 Product Code

		TS900							
Model	Standard type	**TS900**							
	STS316 type	**TS905**							
Acting type	Linear type		L						
	Rotary type		R						
Explosion proof type	KCs, ATEX, NEPSI, CCC, EAC			C					
	CSA			S					
Connection type*	Conduit entry / Air connection								
	G(PF)1/4 / PT1/4				1				
	G(PF)1/4 / NPT1/4				2				
	NPT1/2 / NPT1/4				3				
	M20 / NPT1/4				4				
	M20 / G1/4				5				
Lever type (Linear)	10~80mm					1			
	70~150mm					2			
	For tubeless actuator (70mm)					3			
Lever type (Rotary)	M6 x 39L (Fork lever type)					1			
	NAMUR					5			
Ambient Temp.	-30℃~80℃ (standard)						S		
	-40℃~80℃						L		
	-60℃~80℃ (for EAC)						U		
Communication	None							0	
	Position transmitter(4~20mA DC)							1	
	HART							2	
	HART and Position transmitter (4~20mA DC)							3	
Alarm switch	None								0
	Included								A

Note. *Conduit entry for ATEX/CCC/CSA should be NPT1/2 and M20.
(Connection type number: 3, 4, 5)

2.7 Specification

Model	TS900	TS905
Input signal	4~20mA DC	
Impedance	500Ω (20mA DC)	
Supply pressure	0.14~0.7MPa	
Stroke	Linear type:10~150mm, Rotary type:0~90^0	
Air connection	PT1/4, NPT1/4	
Gauge connection	PT1/8, NPT1/8	
Conduit	NPT1/2, M20	
Explosion proof type	Ex db IIC T5/T6 Gb Ex tb IIIC T100℃/T85℃ Db	
Degree of protection	IP66	
Ambient Temp.	-30℃~+80℃(T5)/+70℃(T6) (Standard type), -40℃~+80℃(T5)/+70℃(T6) (Low temp type)	
Linearity	±0.5% F.S.	
Sensitivity	±0.2% F.S	
Hysteresis	±0.5% F.S	
Repeatability	±0.3% F.S	
Air consumption	Below 2.3LPM (Sup.=0.14MPa)	
Required air quality	Class 3 (ISO 8573-1)	
Flow capacity	Over 100LPM (Sup.=0.14MPa)	
Material	Aluminum die cast	Stainless steel 316
Weight	3.5kg	7.0kg

Option specifications

Options	Item	Specification
HART	HART version	HART 7
Position transmitter	Wire connection type	2 Wire
	Supply voltage	9~30V DC
Alarm switch	Supply voltage	9~30V DC

Note: Please contact our sales department for other specifications.

2.8 Structure

2.8.1 External structure

.

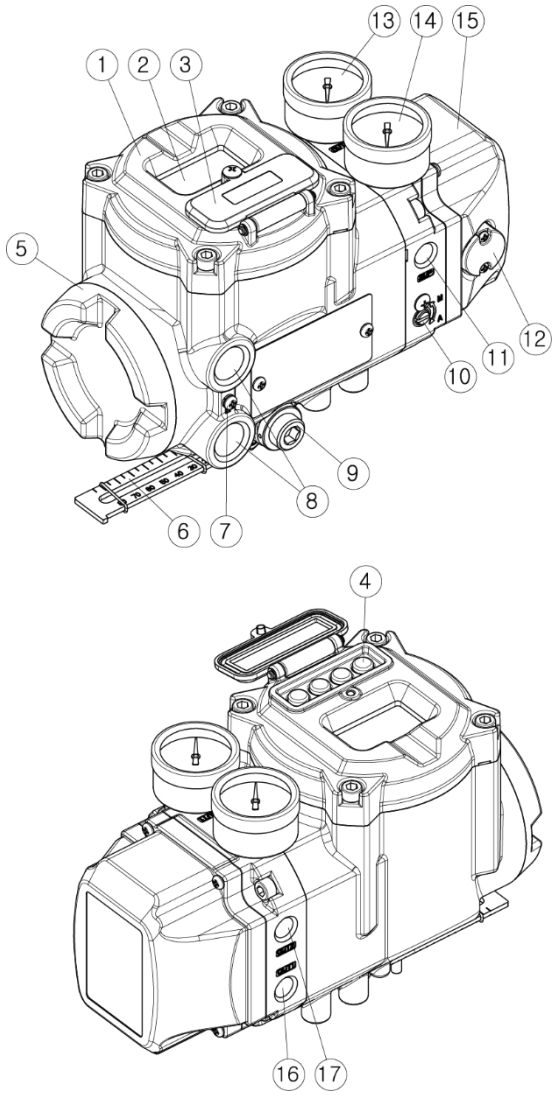

① Body cover
② LCD window
③ Button cover
④ Buttons
⑤ Junction box cover
⑥ Feedback lever
⑦ Ground bolt
⑧ Conduit
⑨ Water vent hole
⑩ Auto/Manual switch
⑪ Supply port
⑫ Air vent hole cover
⑬ OUT2 gauge
⑭ OUT1 gauge
⑮ Pilot valve cover
⑯ OUT1 port
⑰ OUT2 port

2.8.2 Internal structure

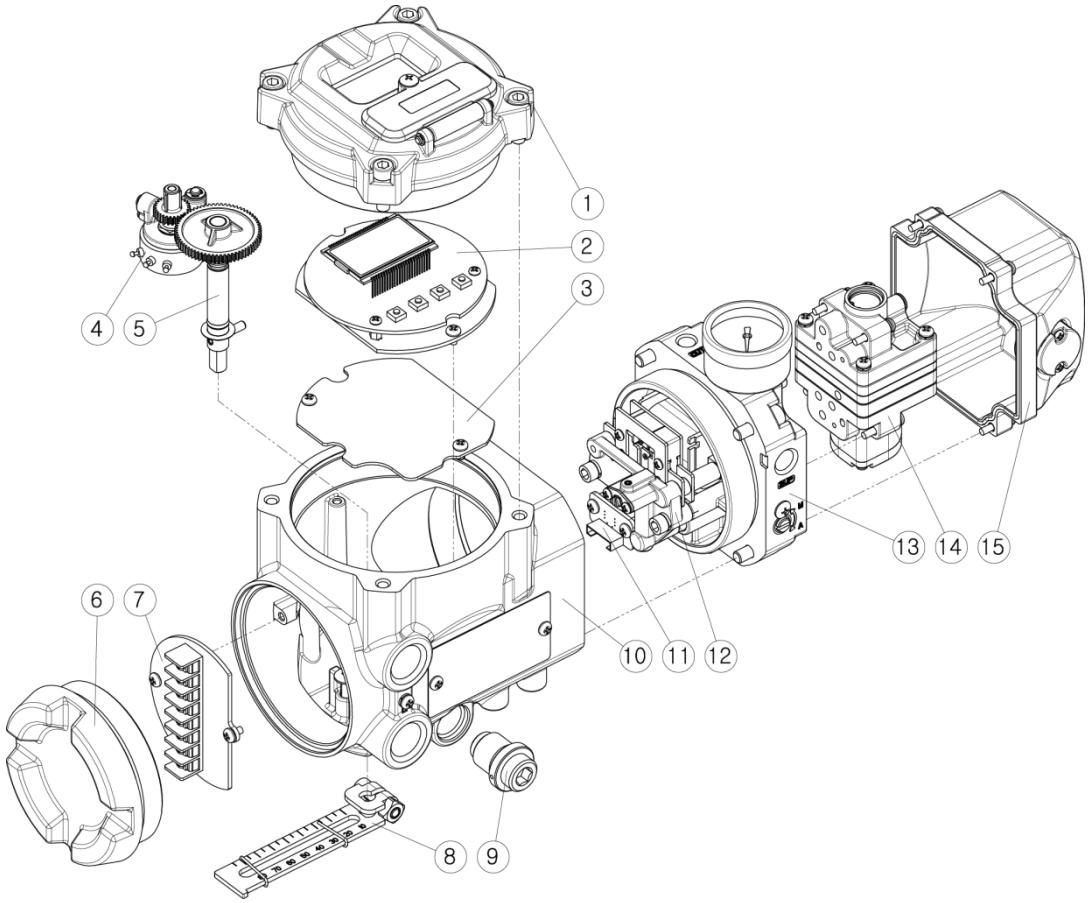

① Body cover	⑨ Water vent cover
② Main PCB	⑩ Body
③ PCB support	⑪ Pressure sensor (Option)
④ Potentiometer	⑫ Torque motor
⑤ Main shaft	⑬ Pneumatic piping block
⑥ Junction box cover	⑭ Pilot valve
⑦ Terminal block	⑮ Pilot valve cover
⑧ Feedback lever	

2.9 System configuration

Basically, the control valve system consists of a positioner for controlling the pneumatic pressure of the actuator, an actuator for controlling the opening of the valve, and a valve for controlling the flow of the fluid.

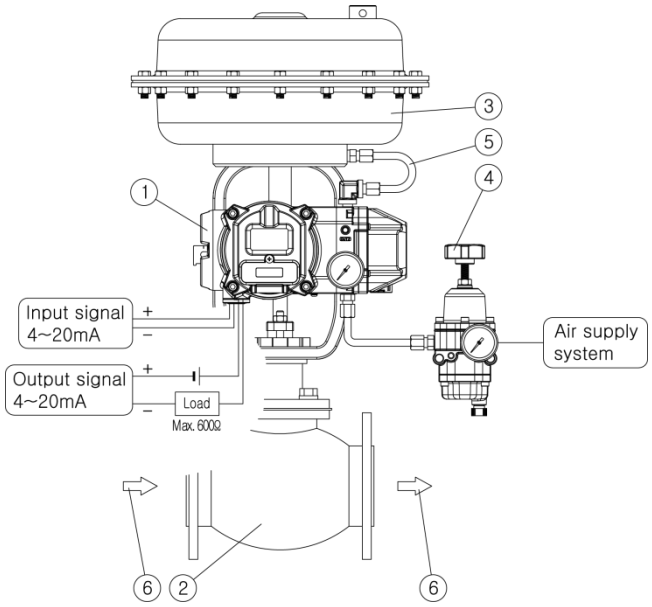

① Positioner (TS900)
② Valve
③ Actuator
④ Regulator
⑤ Out1 vent line
⑥ Fluid

2.10 Principle of operation

TS900 receives the 4-20mA input signal of the control room, the micro-processor (CPU) compares input signal with position feedback through the potentiometer and sends control signal to the I/P conversion module torque motor, torque motor converts it to a pneumatic signal to control the pilot valve to control the opening of the control valve by converting the output pressure of OUT1 and OUT2.

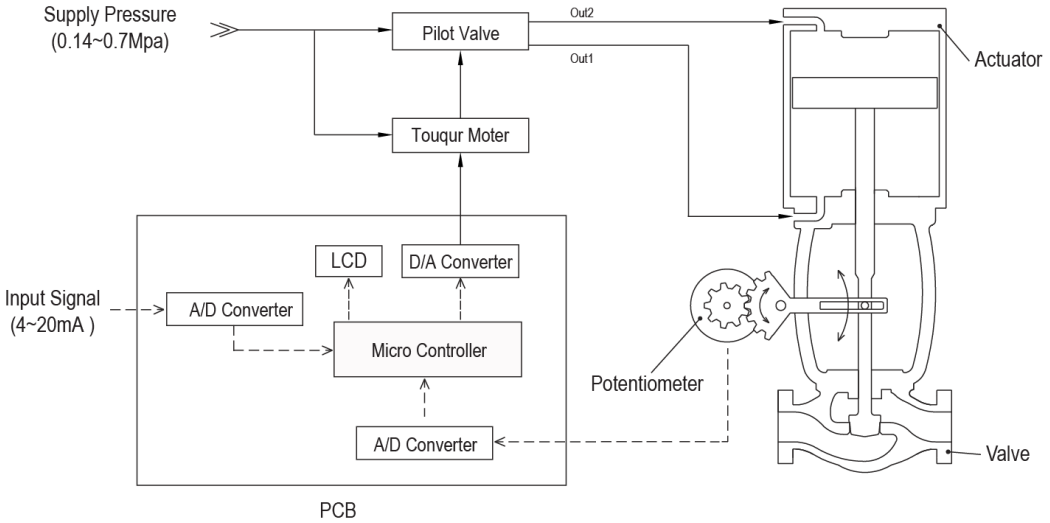

2.11 Product Dimension

2.11.1 TS900 Standard

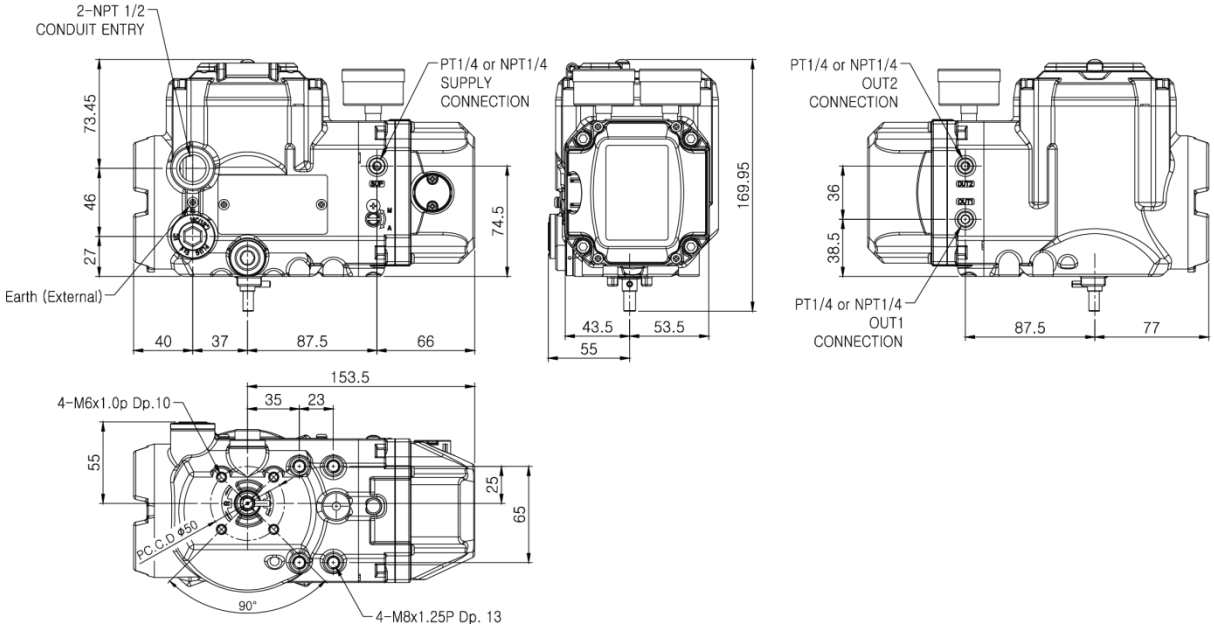

2.11.2 Feedback shaft dimension

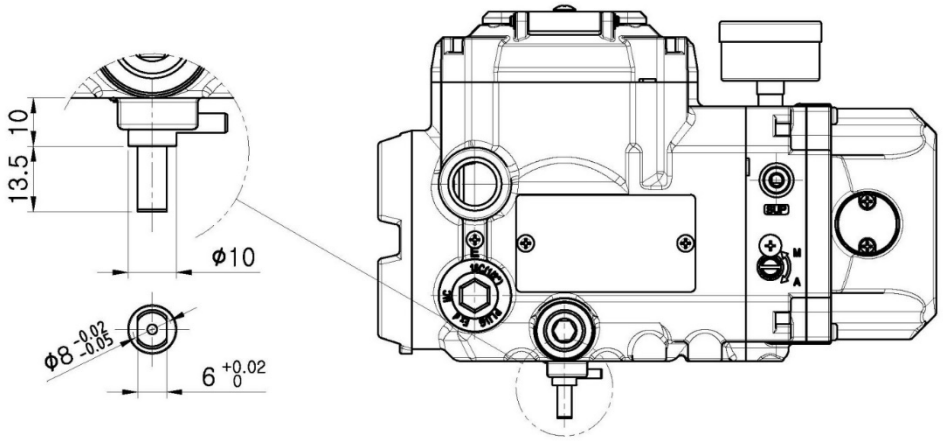

3 Installation

3.1 Before installation

⚠ WARNING

- Make sure if TS900 is appropriate to the valve and actuator installation conditions and the site requirements specifications before installation.
- If the installation state is not correct, TS900 control characteristics may be degraded.

3.2 TS900L installation

3.2.1 Notes on installation

When make the mounting bracket and connecting the lever to the stem connection pin, be sure to observe the following two points.
If don't comply, it will affect the product performance such as linearity.

⚠ NOTICE

① When the valve stroke is 50%, the feedback lever should be horizontal.

② When the valve stroke is 50%, the stem connection pin must be located at the numeric position marked on the feedback lever that is corresponding to the valve stroke.

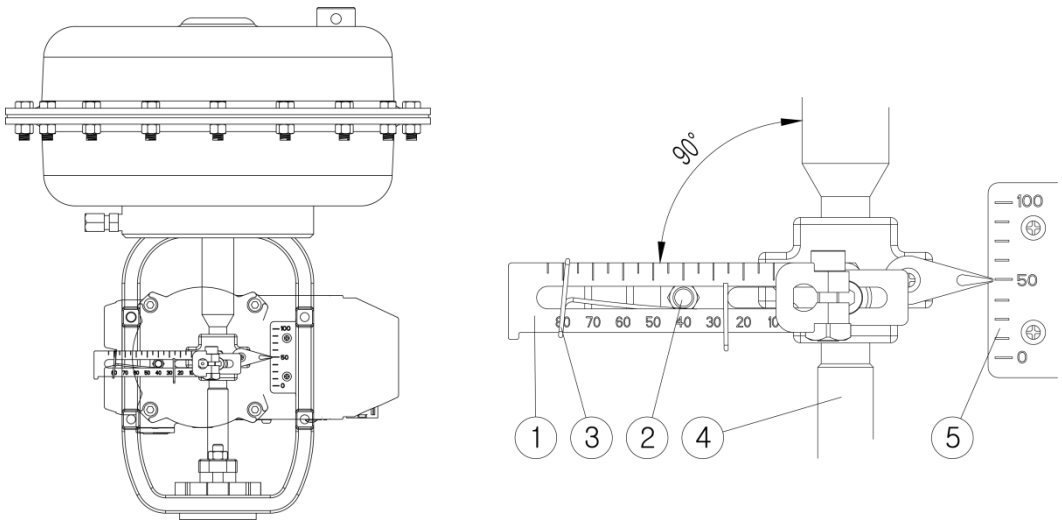

① Feedback lever
② Stem connection pin
③ Pin fixing spring
④ Actuator stem
⑤ Valve opening indicator

3.2.2 Effective rotation angle range of feedback lever

The effective rotation angle of TS900L lever is respectively 30° upward and downward that is based on horizon.
Follow 3.2.1 notes, effective rotation angle can be maintained to achieve the best performance.

⚠ NOTICE

- If the rotation angle range is too small during operation, the performance of products such as linearity may be degradation.
- If the rotation angle range is too big during operation, may damage the product or cause malfunctions.

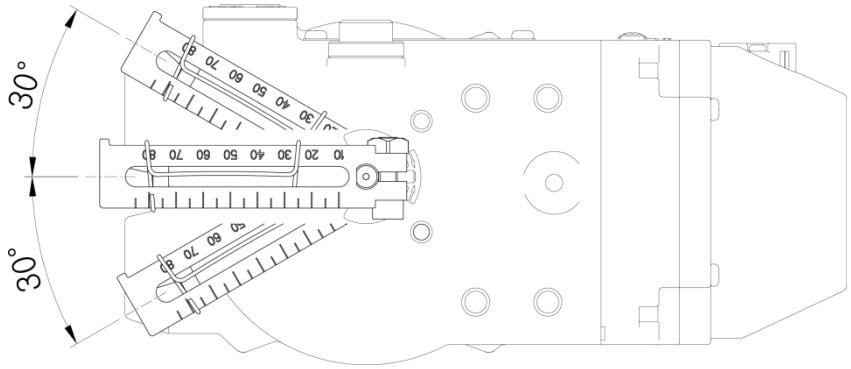

3.2.3 Lever type and dimension

The numeric position marked on the feedback lever correspond to the valve stroke, and the stem connection pin must be connected to the corresponding marked location

Lever No.	Valve stroke	Dimension
No.1	10~80mm	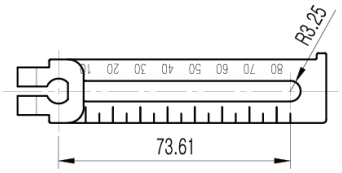
No.2	70~150mm	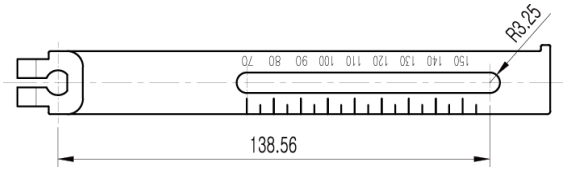
No.3	10~70mm	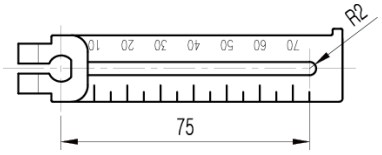

3.2.4 Bracket Installation

Refer to the TS900L drawing (refer to 2.11.1) and actuator drawing, and make appropriate bracket and install the positioner on the actuator.

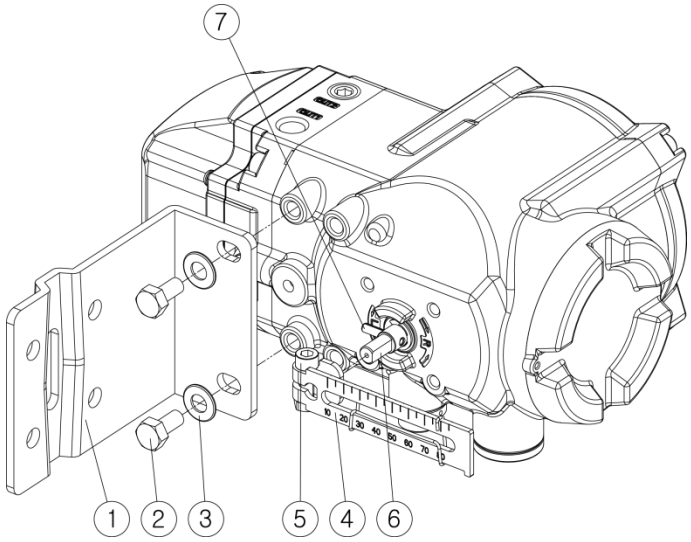

① Bracket
② Bolt (M8)
③ Washer
④ Feedback lever
⑤ Lever fixing bolt
⑥ Main shaft
⑦ Shaft fixing pin

3.2.5 Dimension after installation

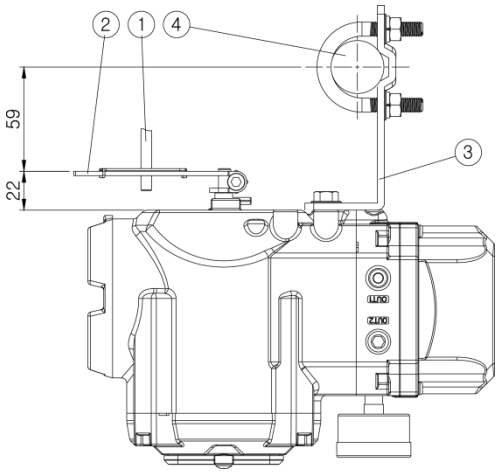

<When the lever is No.1 or 2 >

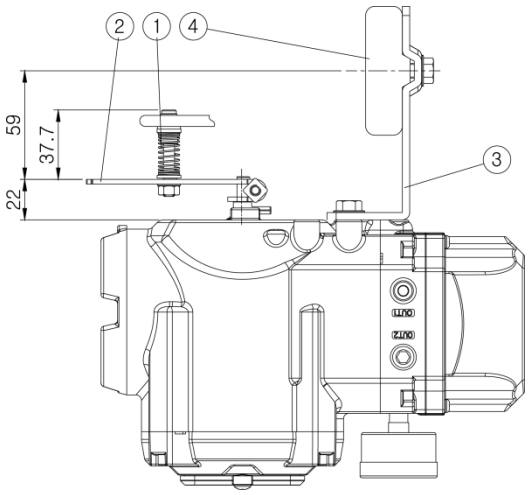

<When the lever is No.3>

① Stem connection pin
② Feedback lever
③ Bracket
④ Actuator york

3.3 TS900R installation

3.3.1 TS900R installation examples

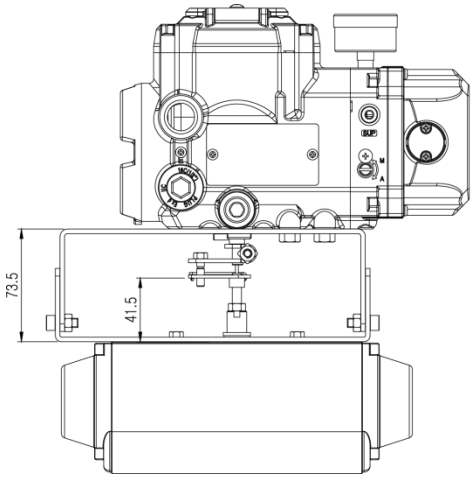

<Fork lever type>

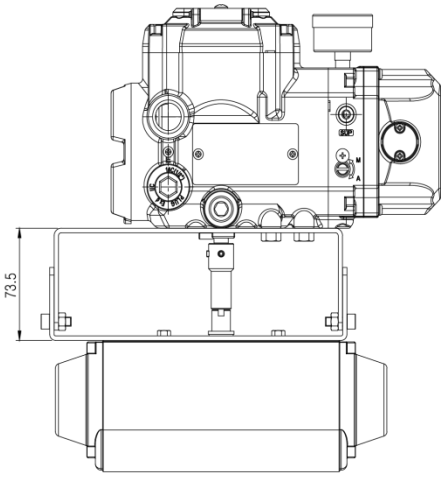

<NAMUR type>

3.3.2 TS900R bracket installation components

When shipped from the factory, No.1~8 parts are provided as standard.

The brackets support the NAMUR mounting standard (VDI/VDE3835, IEC60534-6-2).

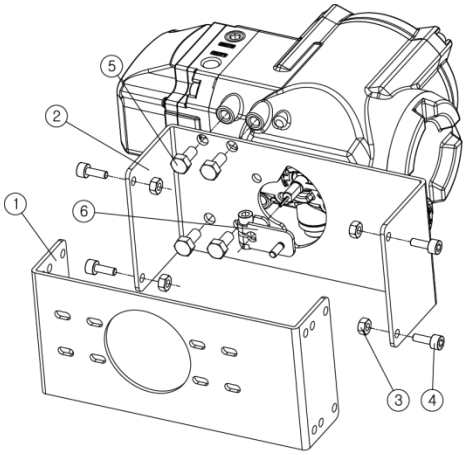

<Fork lever type>

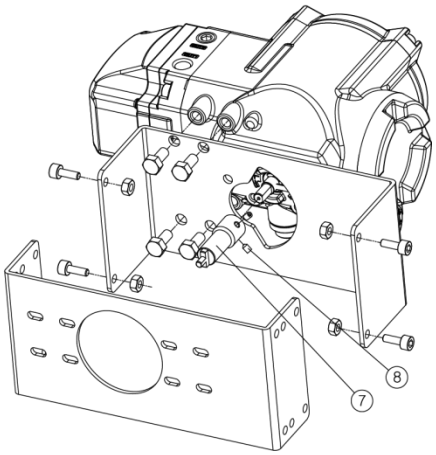

<NAMUR type>

① Lower bracket(1)	⑤ Screws (M8x4)
② Upper bracket(1)	⑥ Fork lever(1)
③ Nuts(4)	⑦ NAMUR adapter (1)
④ Screws (M6x4)	⑧ Adapter fixing pin(2)

3.3.3 TS900R installation steps

1	**Lower bracket installation** Attach the lower bracket to the actuator and secure it with the screw.	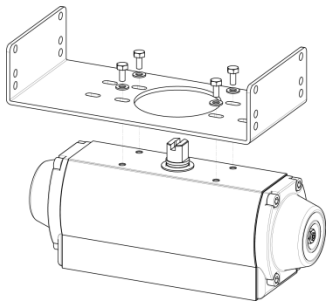
2	**Fork lever installation** Insert the fork lever into the actuator stem and tighten with the fixing bolt.	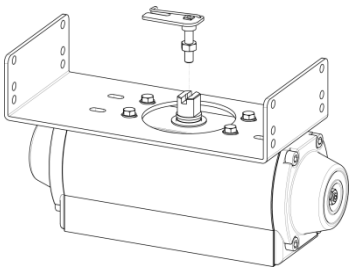
	Position the start point of the fork lever according to the direction of rotation of the actuator stem.	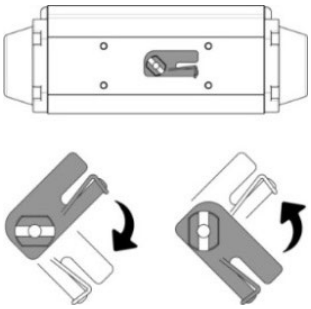
3	**Tighten upper and lower brackets** Connect the upper bracket to the lower bracket attached to the actuator and fasten with the screw.	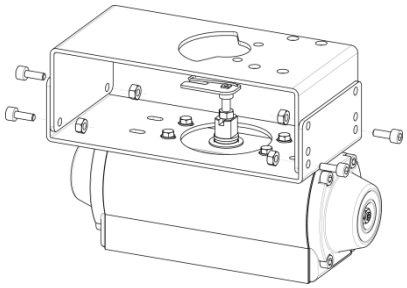
	Tighten the bolts to the corresponding holes of 20.30 and 50 depending on the actuator stem height.	

4	**Shaft lever installation** **Fork lever type** Insert the shaft lever into the main shaft and tighten with the fixing bolt.	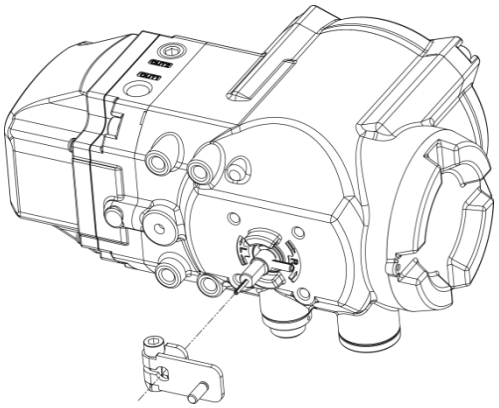
	NAMUR type Insert the NAMUR shaft adapter into main shaft and fix it with two fixing pins.	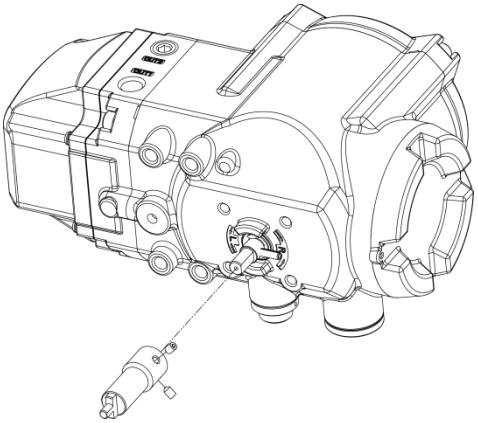
5	**Attach the positioner to the upper bracket and fix it with screw.** At this time, insert the lever pin at the bottom of the fork lever into the hole of the fork lever attached to the actuator and then align the center.	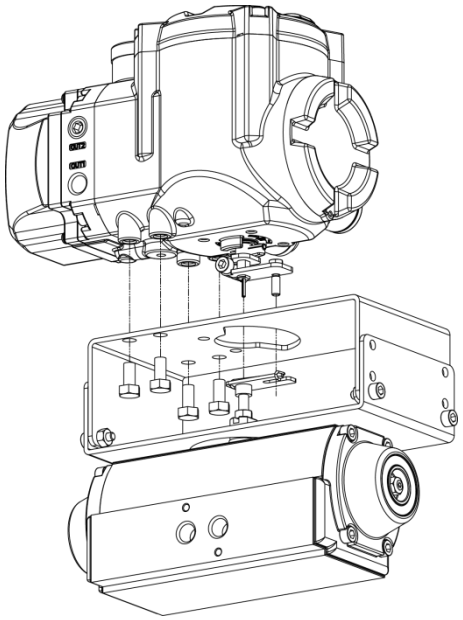

3.4 Option module Installation

According to the site requirements，the following modules can be purchased separately and installed. The corresponding function can be realized by installing modules, and the modules do not affect each other.

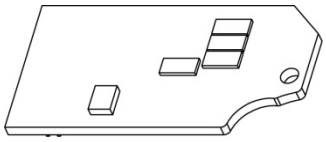

<Position feedback module>

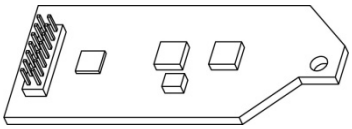

<HART communication module>

3.4.1 Position transmitter module Installation

Open the body cover and remove PCB from the body, and install the position feedback module to Main PCB as figure below.

⚠ NOTICE

- Be sure to have the feedback zero point setting and end point setting once when you after installing the feedback module. Please refer to page 38 OUT ZERO and OUT END setting method.
- Please connect ⑤Jumper when you install PTM module.

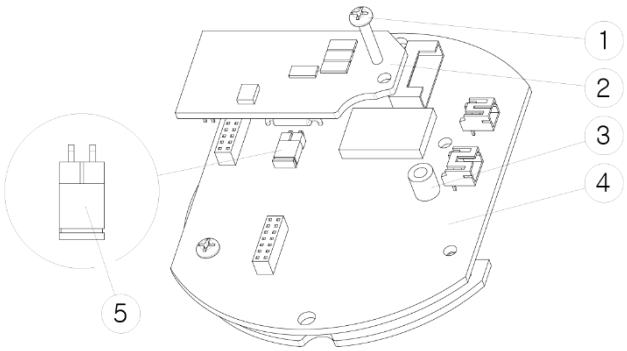

① Fixing bolt
② PTM module
③ Module Bracket
④ Main PCB
⑤ Jumper

3.4.2 HART communication module Installation

Open the body cover and remove the PCB from the body, and install the HART communication module to the main PCB as figure below.

※ Please disconnect ⑤Jumper when you install HART module or install HART and PTM both.

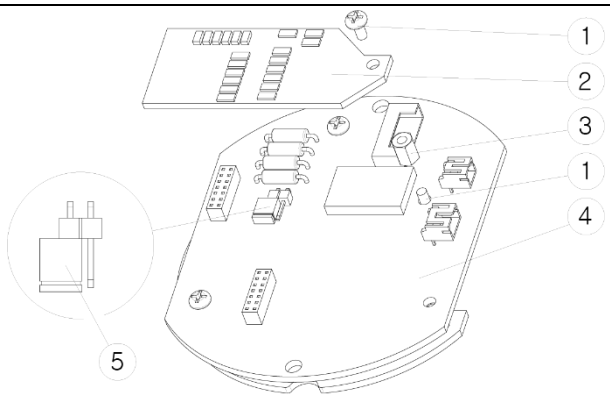

① Fixing bolt
② HART module
③ Module Bracket
④ Main PCB
⑤ Jumper

3.5 How to adjust Auto/Manual switch

⚠ WARNING

- Please be careful as the valve moves when you operate Auto/Manual switch.
- The input air pressure is directly transmitted to the actuator when you switch to manual mode, so do not exceed permissible air pressure range.

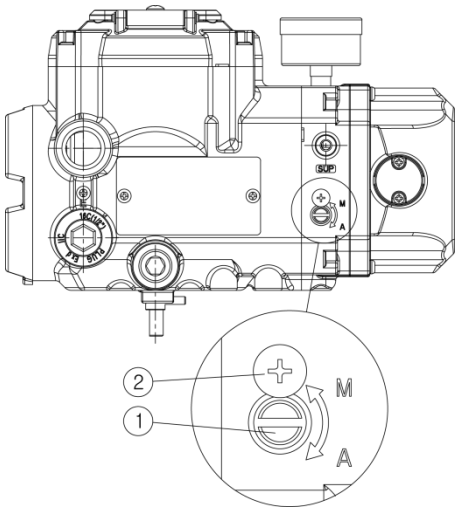

① Auto/Manual switch

② Lock screw

Description	Auto/Manual switch acts as a bypass valve. • If set to Auto, the positioner controls the valve opening. • If set to Manual, regardless of signal from the positioner, the supply pressure input from the regulator is transmitted directly to the actuator.
Purpose	• When Control valve fails, set to Manual mode and adjust the output pressure of the regulator, if the valve moves with the pressure change, there is a high possibility that the positioner has a problem. But if the valve does not move, there is a high probability that the valve has failed. • You can adjust the valve opening with the regulator by switching to Manual mode in case of product installation or field emergency. (It works only in single acting type product)
Adjustment method	• If turns Auto/Manual switch fully clockwise with a slotted screwdriver, it sets to Auto mode, i.e. the positioner controls the valve. • If turns Auto/Manual switch counterclockwise a few times with a slotted screwdriver, it sets to the Manual mode, i.e. the regulator's air pressure is transmitted directly to the actuator.
Notes	• The product is set to Auto mode at the factory.

3.6 Orifice installation

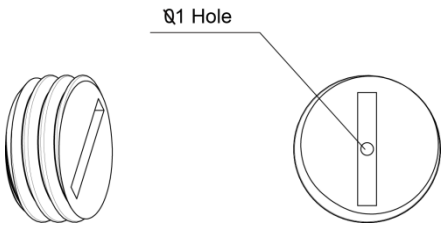

<Orifice>

Purpose
A normal action product does not need to install the orifice, but if the hunting phenomenon occurs after installation on a small actuator, it can be solved by installing an orifice to reduce the output flow of air pressure transmitted to the actuator from the positioner. The hole size of the orifice is 1mm.

How to install

As figure below, Insert the orifice into OUT1 port, and fix it by turning it all the way with a slotted screwdriver

- When using for single type actuator, please install orifice to OUT1 port only.
- When using for double type actuator, please install orifice to both OUT1 and OUT2 ports.

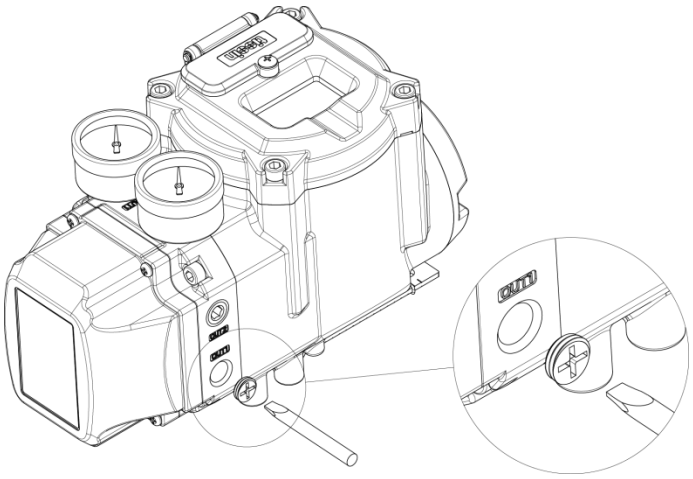

Note

Please contact us, if you need any of the above parts.

4 Pneumatic connection

4.1 Supply air pressure condition

⚠ NOTICE

- Use only dehumidified and dust-extracted compressed clean air.
- The air pressure input must be equipped with a regulator to supply constant air pressure.

4.2 Pneumatic port description

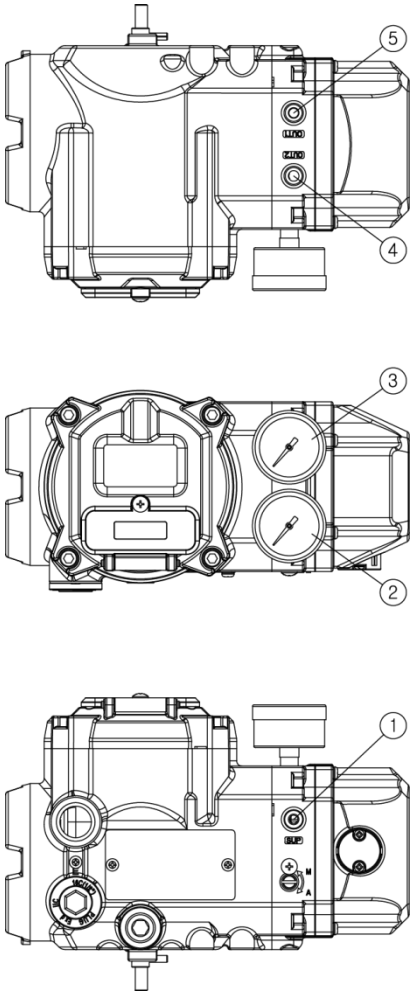

① Supply port

② OUT1 port

③ OUT2 port

④ OUT1 gauge

⑤ OUT2 gauge

4.3 Air connection

NOTICE

- This product is designed to increase the air pressure of OUT1 as the 4 ~ 20mA current input signal increases.

4.3.1 TS900L air connection

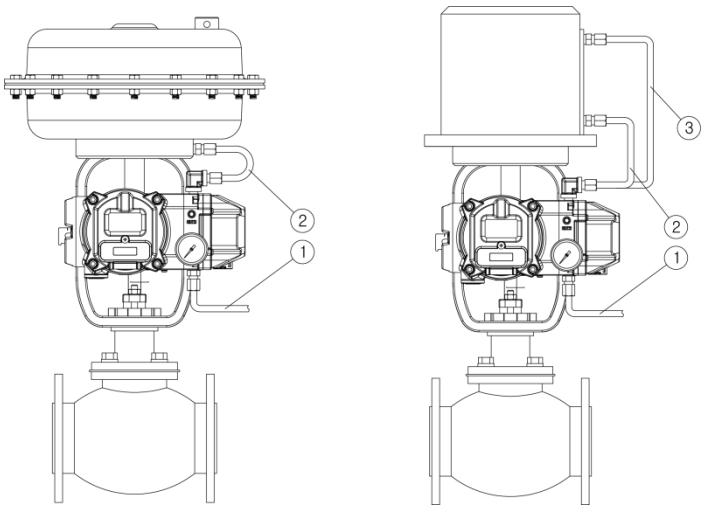

< Piping with single actuator> <Piping with double actuator>

① Air supply

② OUT1

③ OUT2

4.3.2 TS900R air connection

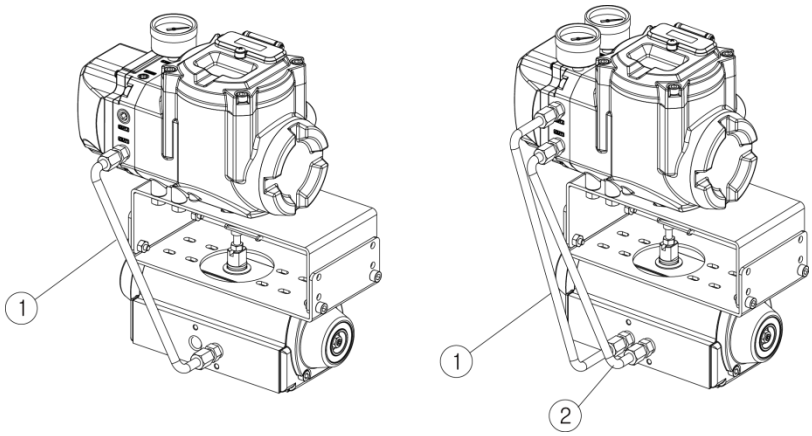

< Piping with single actuator > <Piping with double actuator>

① Air supply

② OUT1

③ OUT2

5 Electrical connection

⚠ WARNING

- Be sure to check always that the electrical load is within the stated range on the nameplate. Exceeding the rating might cause a malfunction to circuit boards or burn out electrical components.
- When opening the terminal cover, be sure to shut off the power first.
- Close all unnecessary cable glands with lock screws approved for the explosions area.
- Conduit entry connection tap is NPT 1/2 or M20x1.5-6H.

5.1 Connection cable description

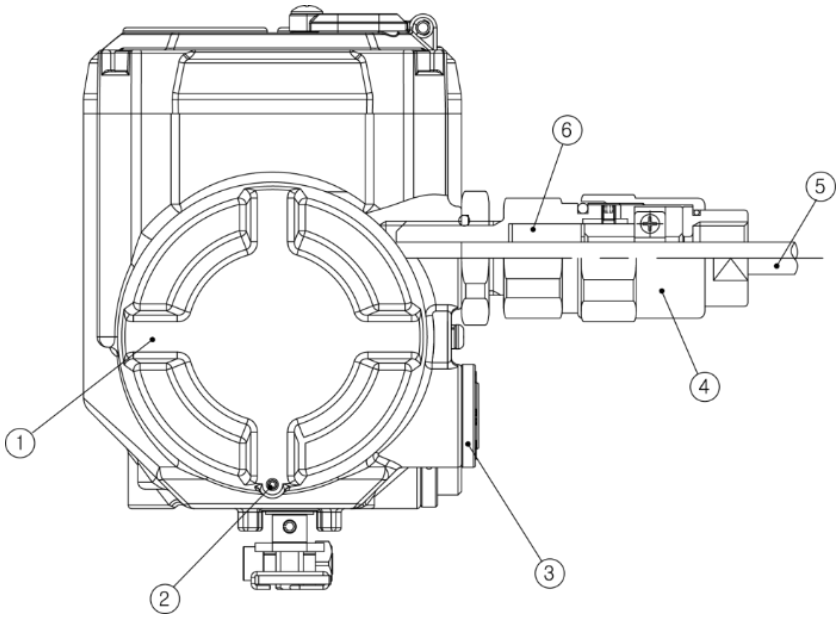

① Terminal cover
② Lock screw
③ Conduit plug
④ Explosion proof cable joint
⑤ Cable
⑥ Seal diaphragm

5.2 Terminal description

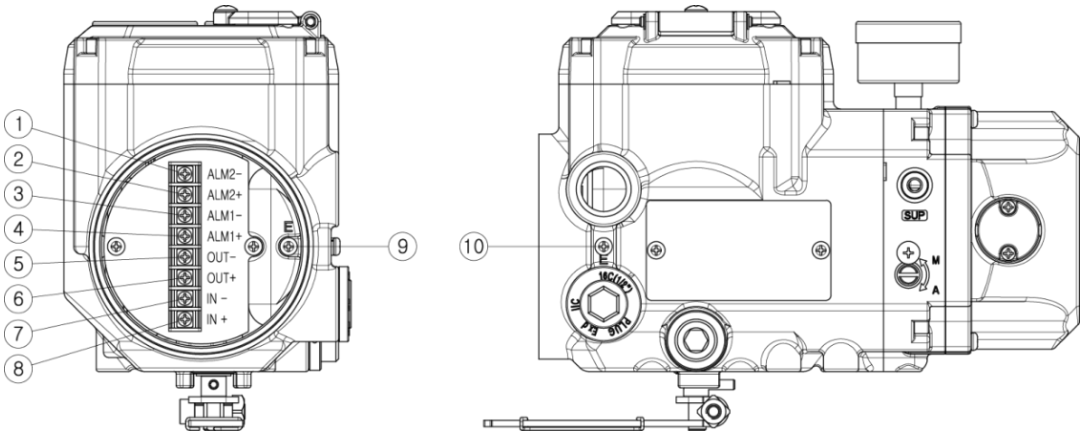

① Alarm2 signal (-)
② Alarm2 signal (+)
③ Alarm1 signal (-)
④ Alarm1 signal (+)
⑤ Feedback signal (-)
⑥ Feedback signal (+)
⑦ Input signal (-)
⑧ Input signal (+)
⑨ Internal ground
⑩ External ground

5.3 Power and feedback signal connection

⚠ WARNING

- Make sure that the input current does not exceed the specification range of the product. Exceeding the specification range may cause malfunction.
- Check polarity of + and – exactly and connect wires.
- Make sure input signal and feedback wiring lines correctly. Incorrect connection of the Feedback line to the power input can damage the components on the PCB.

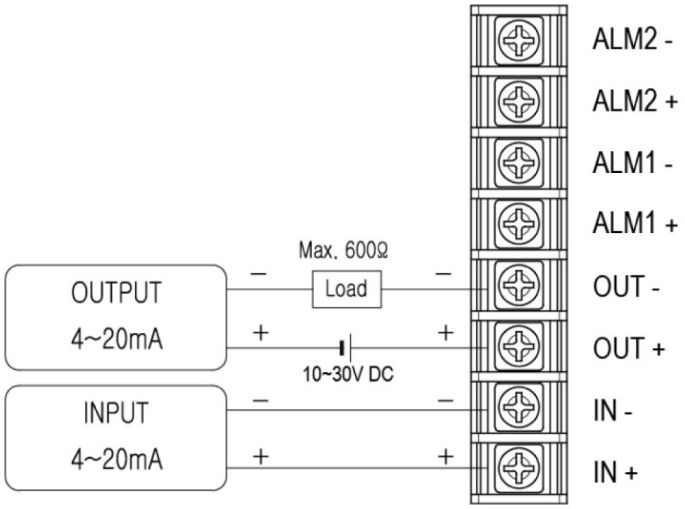

5.4 Alarm switch connection

The alarm module is built in to all products. According to the requirements of the site, you can get the feedback from the emergency alarm signal by wiring as follow.

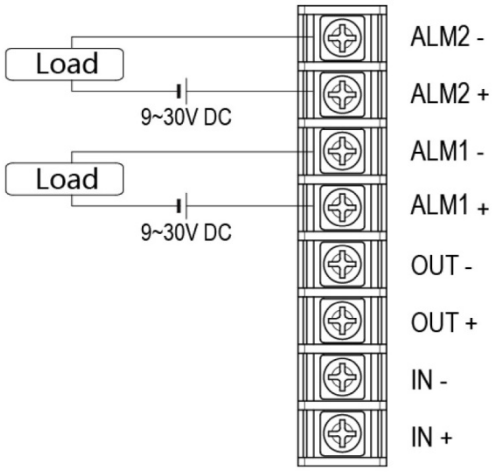

The alarm circuit is OFF when the system is operating normally.
The alarm circuit turns ON according to the set values as below.

- When the product has seriously problems (If priority value of Error code is “0”)
- When there is a potential problem (If priority value of Error code is “1”)
- When the valve is fully open
- When the valve is fully close

For the setting method, please refer to
< **AL1 URGT**> and < **AL2 URGT**> of page 47

6 Calibration

6.1 LCD description

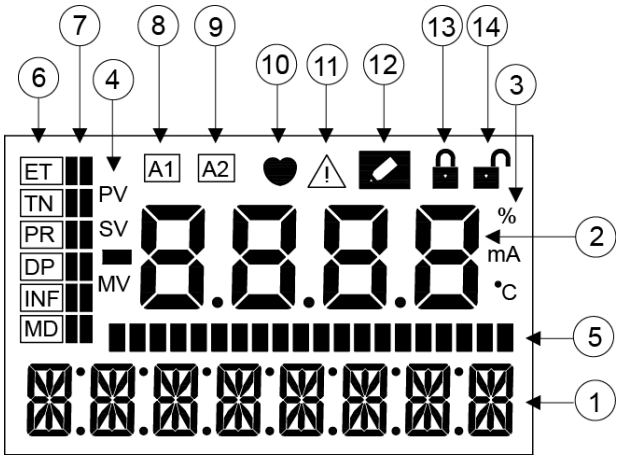

No.	Displayed contents	Description	
①	Menu information	Displays the running menu. (Main menu, Main parameter, Sub parameter)	
②	Menu's value	Displays the currently parameter value of the menu.	
③	Menu's value unit	Displays the currently menu's value unit.	
④	Menu's value separator	**PV**	Progress value
		SV	Signal value
		MV	Motor control value
⑤	Progress bar	Displays the progress of the processor in bar form.	
⑥	Main parameter	Displays the selected main parameter currently.	
⑦	Parameter bar	Displays the position of the selected main parameter.	
⑧	Alarm 1	The icon is displayed, when the set value of alarm 1 is satisfied.	
⑨	Alarm 2	The icon is displayed, when the set value of alarm 2 is satisfied.	
⑩	HART communication	The icon is displayed, when HART communication is in progress.	
⑪	Error code	The icon is displayed If there is an error during calibration or operation.	
⑫	Modifying	The icon is displayed, when changing the internal setting values such as parameter modification.	
⑬	LOCK	The icon is displayed, when the program is locked.	
⑭	UNLOCK	The icon is displayed, when the program is unlocked.	

6.2 Button description

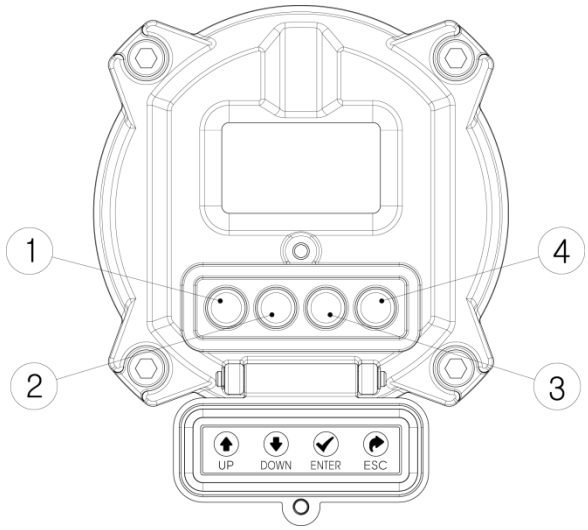

① UP button

② DOWN button

③ ENTER button

④ ESC button

Button	Description
ENTER	• Execute the functions of the selected menu. • Saving the modified parameter values.
ESC	• Moving from the current menu go back to the upper level menu. • Cancel current command.
UP	• Moving between menus of the same level such as main menu, main parameter, sub parameter. • Change to the larger value of the set value of the selected parameter.
DOWN	• Moving between menus of the same level such as main menu, main parameter, sub parameter. • Change to the smaller value of the set value of the selected parameter.

6.3 How to quickly perform Auto calibration

Open the cover of the product and follow below steps to perform Auto calibration.

① Please input current signal **18mA**, then press **<UP>** button for 3 seconds.
② The positioner automatically performs Auto calibration.
③ Auto Calibration is performed sequentially from STEP 1 to 7 on LCD, and may take 2-5 minutes depending on the valve size.

NOTICE

- If an error occurs during Auto calibration, please refer to Error codes on page 49 to 50.

6.3.1 Auto calibration Steps

When you progress auto calibration, it automatically proceed in the following steps below.

Steps	Description
STEP0	Check ZERO point of the valve speed. Checked at the reference point of valve stops.
STEP1	Find ZERO point of the valve stroke.
STEP2	Find END point of the valve stroke.
STEP3	Measure the valve fully close time. Measure the time of the valve takes from full open to full close.
STEP4	Measure the valve fully open time. Measure the time of the valve takes from full close to full open.
STEP5	Measure Low BIAS Measure the motor signal reference value, when the position of valve at 25%.
STEP6	Measure High BIAS Measure the motor signal reference value, when the position of valve at 75%.
STEP7	Measure maximum error value.

6.4 Software map

- To enter Main Parameter menu :
  Please input 4-20mA current signal and press **<ENTER>** button for 3 seconds after booting up.

- To enter Submenu :
  Press **<UP>** or **<DOWN>** button to select Main Parameter menu and press **<ENTER>** button.

- To select Submenu :
  Press **<UP>** or **<DOWN>** button.

Main parameter menu	TUNNING	PARAMETR	DEVICE P	INFOMATN	DIAGNOST	EMERGNCy
Submenu	AUTO RN1	DEAD bND	ACTU SNG	FIRM VER	ERR CODE	PASSWORD
	AUTO RN2	KP	ACTU LIN	DEVI REV	AUTO CHK	EMGY NON
	AM FULL	KI	FORCE OP	HART VER	PST RUN	FULL OP
	TbL	KD	FORCE CL	dEid	PST CFG	FULL CL
	VAL OPCL	GKP	DAMP	POLL ADD	PST REDy	STOP
	VAL ZERO	GKI	SPLT ZER	TRAVEL K	AL1 NONE	UNLOCK
	VAL END	GKD	SPLT END	OP TIME	AL2 NONE	
	OUT ZERO	KF	COMPENSA	CL TIME		
	OUT END	KL	ACT NORM	TEMPERAT		
	IN ZERO	RANGE I	OUT NORM	TEMP MAX		
	IN END	CHAR LIN	HT NORMR	TEMP MIN		
		USER DEF	DSP NORM			

6.5 Main menu description

After the product is booted, **<MAIN LIN>** is displayed, which shows the current opening of the valve. Press **<UP>** or **<DOWN>** button to move to the following menu and check the corresponding information.

In Main menu, information such as the valve opening and the magnitude of the input current signal can be checked and the execution of the command or the modification of the parameter value cannot be performed.

<table>
<tr><th>Main menu</th><th colspan="2">Description</th></tr>
<tr><td rowspan="7">MAIN LIN</td><td colspan="2">Displayed the percentage of current valve opening value.
Depending on the set value of the flow characteristics, one of the following values is displayed.</td></tr>
<tr><td>LCD display value</td><td>Flow characteristics</td></tr>
<tr><td>MAIN LIN</td><td>Linear</td></tr>
<tr><td>MAIN EQ1</td><td>EQ1 (1/25)</td></tr>
<tr><td>MAIN EQ2</td><td>EQ2 (1/50)</td></tr>
<tr><td>MAIN QO</td><td>Quick Open</td></tr>
<tr><td>MAIN USR</td><td>User defined 17 points</td></tr>
<tr><td>MAIN IN %</td><td colspan="2">Displayed the magnitude of input signal that the positioner recognizes as percentage.
• If the size of the input signal recognized by the positioner differs from output signal of the DCS or calibrator, check the voltage of the power supply.
• If the supply current is normal, please reset <IN ZERO> and <IN END> values in <TUNING> of main parameter.</td></tr>
<tr><td>MAIN IN mA</td><td colspan="2">Displayed the magnitude of input signal that the positioner recognizes as mA.
• If the size of the input signal recognized by the positioner differs from output signal of the DCS or calibrator, check the voltage of the power supply.
• If the supply current is normal, please reset <IN ZERO> and <IN END> values in <TUNNING> of main parameter.</td></tr>
<tr><td>MAIN VEL</td><td colspan="2">Displayed currently operating speed of the valve as numbers.
• As the value, between -2047 to +2048, negative numbers indicate speed at close, and positive numbers indicate speed at open.
• 0 means stop and the larger the absolute value, the faster the speed.</td></tr>
<tr><td>MAIN DEV %</td><td colspan="2">Displayed the percentage of error between the current input signal and valve opening value.
• The larger the error, the lower the control characteristic.</td></tr>
<tr><td>ABSP DIG</td><td colspan="2">ABS Potentiometer Digit value
Value converted to digital value by reading Potentiometer resistance value (range: 0 ~ 4095)</td></tr>
<tr><td>ABSP PER</td><td colspan="2">ABS Potentiometer value in percentage
Value in percentage converted to digital value by reading Potentiometer resistance value (range: 0% ~ 100%)</td></tr>
</table>

6.6 Main parameter menu Description

Main parameter menu corresponds to main menu in which various parameters are classified by function.

- After the product is booted, press **<ENTER>** button for 3 seconds to enter Main Parameter menu.
- Main parameter menu is classified as below and can be moved by pressing **<UP>** or **<DOWN>** button.
- Press **<ENTER>** button in the corresponding menu to enter Submenu.

Main parameter menu	Main function
TUNNING	• Run Auto calibration. • Change Zero and Span of the valve manually. • Change Zero and Span of feedback signal manually.
PARAMETR	• Set Dead band. • Change PID values. • Change flow characteristics.
DEVICE P	• Set Single/Double according to actuator type. • Set Linear/Rotary according to actuator type. • Set signal point of Force Open/Close. • Set acting type. (Direct Action / Reverse Action) • Set the valve acting speed. (DAMP)
INFOMATN	• Display the product model. • Display the device and HART version. • Display Full Open/Close time. • Display the current ambient temperature, the recorded maximum ambient temperature, and the recorded minimum ambient temperature.
DIAGNOST	• Display the error code. • Set PST function. • Set Alarm function.
EMERGNCy	• Set Password. • In case of emergency, set to forcibly open the valve, or close valve, or maintain current position of the function. • Set Lock and Unlock function.

6.7 Submenu Description

The following is a detailed description of Main parameter menu's Submenu.

- Press <**ENTER**> button in Main parameter menu to enter Submenu.
- Use <**UP**> and <**DOWN**> button to move between Submenu.

6.7.1 TUNNING

<table>
<tr><th>Submenu</th><th colspan="2">Description</th></tr>
<tr><td>AUTO RN1</td><td colspan="2">Run Auto calibration.
• Executable from any input signal between 4 and 20 mA.
• It takes 1~3 minutes, depending on the valve size.
• Same PID values are applied when the valve is open/close.</td></tr>
<tr><td rowspan="3">AUTO RN2</td><td colspan="2">Run Auto calibration.
• Executable from any input signal between 4 and 20 mA.
• The running time of AUTO RN2 is 2~3 times than AUTO RN1.
• Different PID values are applied when the valve is open/close.</td></tr>
<tr><td colspan="2">NOTICE</td></tr>
<tr><td colspan="2">• Please use this mode when the control characteristics(ex. friction) are different when the valve is open/close.
• Please do NOT use this mode when the product includes HART option.</td></tr>
<tr><td rowspan="6">AM</td><td colspan="2">Select Auto calibration mode.</td></tr>
<tr><td>Mode</td><td>Description</td></tr>
<tr><td>AM FULL</td><td>Set all parameter values again.</td></tr>
<tr><td>AM BIAS</td><td>Only reset the motor reference value, but the other parameter values are not modified.</td></tr>
<tr><td>AM PIDb</td><td>Only reset PID value, but the other parameter values are not modified.</td></tr>
<tr><td>AM ZEb R</td><td>Only reset End point and Zero point of the valve, but the other parameter values are not modified.</td></tr>
<tr><td>Factory setting</td><td>AM FULL</td></tr>
<tr><td rowspan="6">TbL</td><td colspan="2">Set the sensitivity of product.
The setting value can be changed when hunting occurs due to a large friction of the valve stem or a small actuator size.</td></tr>
<tr><td>TbL 1 HS</td><td>When hunting occurs due to the actuator size is very small.</td></tr>
<tr><td>TbL 2 NS</td><td>Normal mode.</td></tr>
<tr><td>TbL 3 LS</td><td>When you want to lower the sensitivity.
For example, when hunting occurs due to the high friction of the valve stem.</td></tr>
<tr><td>TbL 4 LLS</td><td>When the actuator size is very large.</td></tr>
<tr><td>Factory setting</td><td>TbL 2 NS</td></tr>
</table>

VAL OPCL	Regardless of the current signal, it performs the function of opening and closing the valve with <**UP**> or <**DOWN**> button manually.
VAL ZERO	Reset ZERO point of the valve manually. Input 4mA current, press <**UP**> and <**DOWN**> button to change the valve position, and press <**ENTER**>button to save the current valve position, then the positioner recognizes the current position as valve ZERO point.
VAL END	Reset END point of the valve manually. Input 20mA current, press <**UP**> and <**DOWN**> button to change the valve position, and press <**ENTER**>button to save the current valve position, then the positioner recognizes the current position as valve END point.
OUT ZERO	Reset ZERO point of the feedback signal manually. Input **4mA** current signal, valve reaches Zero position, after press <**UP**> or <**DOWN**> button to adjust the value, until the 4mA feedback signal is output, and then press <**ENTER**>button to save.
	⚠ **NOTICE**
	Please reset **OUT ZERO** setting after installing feedback module.
OUT END	Reset END point of the feedback signal manually. Input **20mA** current signal, valve reaches end position, after press <**UP**> or <**DOWN**> button to adjust the value, until the 20mA feedback signal is output, and then press <**ENTER**> button to save.
	⚠ **NOTICE**
	Please reset **OUT END** setting after installing feedback module.
IN ZERO	Reset ZERO value of input signal manually. If <**MAIN IN%**> and <**MAIN mA**> displayed at Main menu differ from the actual input signal, conduct the commands of this menu. Input 4mA current at this menu and press <**ENTER**> button twice to save.
	⚠ **NOTICE**
	After replacing the main board or conduct program initialization, please reset **IN ZERO** setting.
IN END	Reset END value of input signal manually. If <**MAIN IN%>** and <**MAIN mA**> displayed in Main menu differ from the actual input signal, conduct the commands of this menu. Input **20mA** current at this menu and press <**ENTER**> button twice to save.
	⚠ **NOTICE**
	After replacing the main board or conduct program initialization, please reset **IN END** setting.

6.7.2 PARAMETR

Submenu	Description	
DEAD bND	Dead band range, the range of allowable control error. • If hunting or oscillation occurs due to high packing friction of the valve, the problem can be solved by increasing the value within the range allowed by the field. • If the value is set too high, the accuracy may be reduced.	
	Range	0~10%
	Factory setting	0.3%
KP	P control value, the proportionality constant value of the control signal in the process of reaching the target point • If the setting value increase, the positioner finds the target point quickly but it is more likely to have hunting. • If the setting value decrease, the stability of the positioner is higher, but positioner finds the target point slowly.	
	Range	0~500
KI	I control value, the integral value that adds the correction signal according to the error percentage to the existing correction signal. • If the setting value is too high, the time to reach the target point is accelerated, but the oscillation phenomenon is easy to occur. • If the setting value is too low, it will slow down the search for the target point.	
	Range	0~500
KD	D control value, indicates the derivative value of the compensation signal based on the percentage of error allowance. • If the setting value is too high, it will slow down the search for the target point. • If the setting is too low, the oscillation is likely to occur.	
	Range	0~500
GKP	P control value, the proportionality constant value of the control signal in the process of reaching the target point • The function is the same as KP control value but falls within the ± 1% error range of the target value, GKP value is applied instead of KP value.	
	Range	0~5.0
GKI	I control value, the integral value that adds the correction signal according to the error percentage to the existing correction signal. • The function is the same as KI control value but falls within the ± 1% error range of the target value, GKI value is applied instead of KI value.	
	Range	0~5.0
GKD	D control value, indicates the derivative value of the compensation signal based on the percentage of error allowance. • The function is the same as KD control value but falls within the ± 1% error range of the target value, GKD value is applied instead of KD value.	
	Range	0~5.0
KF	Control value to overcome valve friction. • Increasing KF value can improve hunting caused by valve friction.	
	Range	0~500
	Factory setting	0

KL	Control value to overcome overshooting. • Increasing KL value can improve overshooting problem.	
	Range	0~50
	Factory setting	0
RANGE I	Control the maximum control range of I value in % units. • If this value is too high, the time of Auto calibration is increased and excessive I value is used, which is likely to cause overshooting. • If this value is too low, the time of Auto calibration is shorten. But it makes I value's control range smaller, so the positioner may not be able to control the position sensitively.	
	Range	1~40
	Factory setting	5

CHAR

Set the characteristics of the valve control.

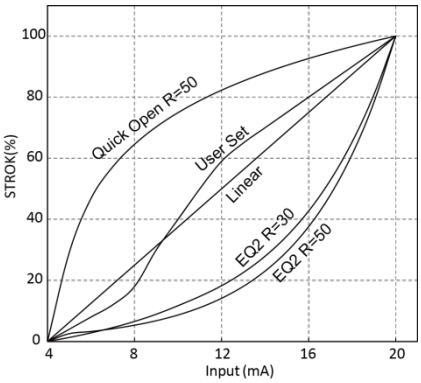

Input (mA)	Linear (%)	EQ1 (%)	EQ2 (%)	QO (%)	USER (%)
4	0	0	0	0	0
5	6.25	2.55	1.31	29.13	4
6	12.5	3.26	2.81	46.84	8
7	18.75	4.16	4.54	57.21	12
8	25	5.32	6.55	64.56	18
9	31.25	6.79	8.92	70.27	30
10	37.5	8.67	11.73	74.93	40
11	43.75	11.07	14.76	78.87	50
12	50	14.14	18.26	82.28	59
13	56.25	18.06	22.58	85.29	65
14	62.5	23.06	27.93	87.99	70
15	68.75	29.45	34.55	90.42	75
16	75	37.61	42.73	92.65	80
17	81.25	48.02	52.85	94.69	85
18	87.5	61.32	65.37	96.59	90
19	93.75	78.31	80.85	98.35	95
20	100	100	100	100	100

Mode	**CHAR LIN**	Linear
	CHAR EQ1	Equal percentage (1/25)
	CHAR EQ2	Equal percentage (1/50)
	CHAR QUI	Quick Open
	CHAR USR	User defined 17 points
Factory setting	**CHAR LIN**	

USER DEF

Run the special flow curve by user-defined 17 points.
- In addition to the above Linear, Equal percentage, Quick open and other typical flow characteristics, the user can set the 4~20mA corresponding valve stroke position to achieve special flow curve control.
- To run this function, **<CHAR USR>** must be set at **<CHAR>** menu.

Steps	Description
***USR P0**	Set the valve position when the input signal is 4 mA.
***USE P1**	Set the valve position when the input signal is 5 mA.
***USR P2**	Set the valve position when the input signal is 6 mA.
***USR P3~16**	Follow above steps for setting the valve position when the input signal is 7~19mA .
***USR P17**	Set the valve position when the input signal is 20 mA.

6.7.3 DEVICE P

Submenu	Description		
ACTU SNG	Depending on the actuator type, it must be set to Single or Double manually.		
	⚠ **NOTICE**		
	If the setting differs from the actuator type, the control characteristic may be degraded.		
	Mode	**ACTU SNG**	Single type
		ACTU DbL	Double type
	Factory setting	TS900L	**ACTU SNG**
		TS900R	**ACTU DbL**
ACTU LIN	Depending on the actuator type, it must be set to Linear or Rotary manually.		
	⚠ **NOTICE**		
	If the setting differs from the actuator type, the control characteristic may be degraded.		
	Mode	**ACTU LIN**	Linear type
		ACTU ROT	Rotary type
	Factory setting	TS900L	**ACTU LIN**
		TS900R	**ACTU ROT**
FORCE OP	When the input signal is higher than the set value, the valve is forced to open. This parameter is used to move the valve into its seat with the maximum force of the actuator. 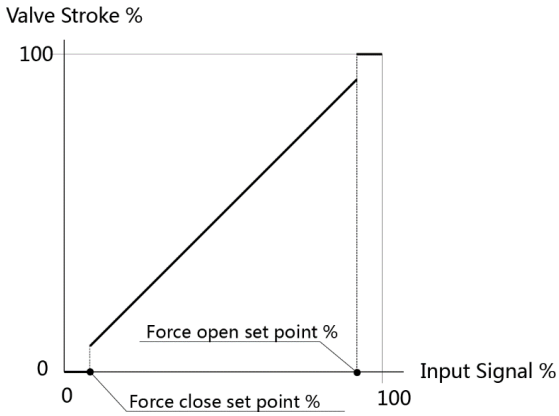		
	Range	0~100%	
	Factory setting	TS900L	100%
		TS900R	99.7%
	Note	When the value set to 100%, this function is not applied.	
FORCE CL	When the input current signal is lower than the set value, the valve is forced to close. • When the valve is closed, residual pressure in the actuator chamber can be completely released.		
	Range	0~100%	
	Factory setting	0.3%	
	Note	When the value set to 0%, this function is not applied.	

DAMP	This function controls the operating speed of the valve. • The higher the set value, the slower the operating speed of the valve. • With this function, hunting problem in small actuator can be solved.		
	Range	0~500	
	Factory setting	0	
	Note	When the value set to 0, this function is not applied.	
SPLIT ZER	Set Zero point of the signal value during the split range control. For example, if the set value is 50%, 12mA corresponds to 0% of the valve opening as shown on the right figure . 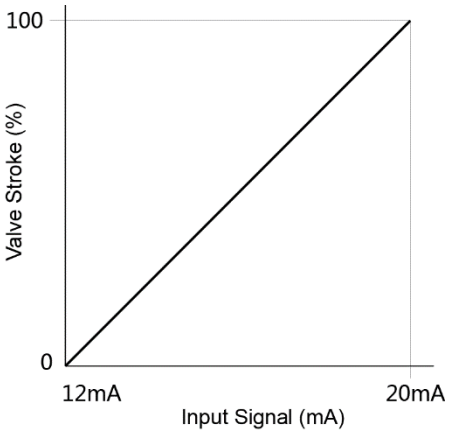		
	Range	0~100.0%	
	Factory setting	0.0%	
SPLIT END	Set End point of the signal value during the split range control. For example, if the set value is 50%, 12mA corresponds to 100% of the valve opening as shown on the right figure . 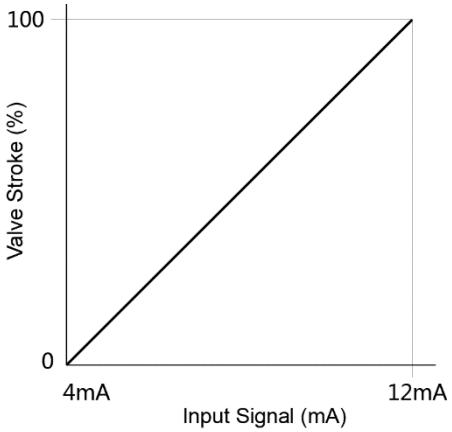		
	Range	0~100.0%	
	Factory setting	100.0%	
COMPENSA	This parameter corrects the error between LCD value and actual valve opening.		
	⚠ **NOTICE**		
	This function should only be used with Linear type products and Rotary products must be set to 0%.		
	Range	-50.0~50.0%	
	Factory setting	TS900L(Linear type)	3.0%
		TS900R(Rotary type)	0.0%

<table>
<tr><td rowspan="5">ACT NORM</td><td colspan="3">Change the action type of the valve.</td></tr>
<tr><td colspan="2">Reverse Action</td><td>Direct Action</td></tr>
<tr><td colspan="2"> 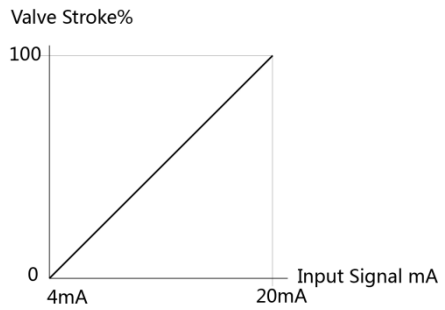
</td><td> 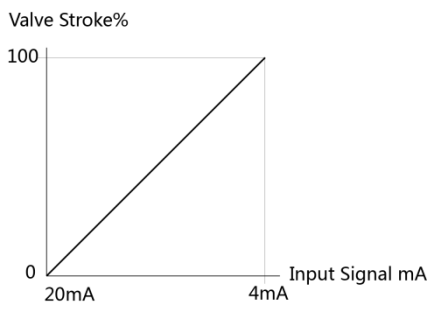
</td></tr>
<tr><td rowspan="2">Mode</td><td>ACT NORM</td><td>Reverse Action</td></tr>
<tr><td>ACT REVE</td><td>Direct Action</td></tr>
<tr><td>Factory setting</td><td colspan="2">ACT NORM</td></tr>
<tr><td rowspan="5">OUT NORM</td><td colspan="3">Set the feedback signal from the positioner can be output at the same percentage as the valve stroke, or the opposite percentage.</td></tr>
<tr><td colspan="2">Normal</td><td>Reverse</td></tr>
<tr><td colspan="2"> 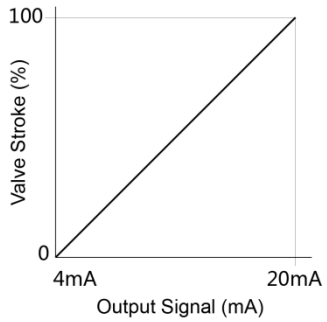
</td><td> 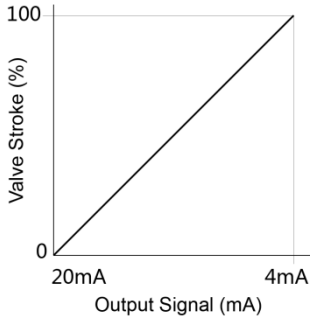
</td></tr>
<tr><td rowspan="2">Mode</td><td>OUT NORM</td><td>Normal action</td></tr>
<tr><td>OUT REVE</td><td>Reverse action</td></tr>
<tr><td>Factory setting</td><td colspan="2">OUT NORM</td></tr>
<tr><td rowspan="4">HT NORMR</td><td colspan="3">Adjusts the valve opening in the forward reverse or direction of HART communication signal.</td></tr>
<tr><td rowspan="2">Mode</td><td>HT NORMR</td><td>Direct action</td></tr>
<tr><td>HT REVER</td><td>Reverse action</td></tr>
<tr><td>Factory setting</td><td colspan="2">HT NORMR</td></tr>
<tr><td rowspan="5">DSP NORM</td><td colspan="3">Display the valve opening value on LCD in direct/reverse direction.</td></tr>
<tr><td>Mode</td><td colspan="2">Description</td></tr>
<tr><td>DSP NORM</td><td colspan="2">Displayed 0% on LCD when the valve is 0%, and displayed 100% on LCD when the valve is 100%.</td></tr>
<tr><td>DSP REVE</td><td colspan="2">Displayed 100% on LCD when the valve is 0%, and displayed 0% on LCD when the valve is 100%.</td></tr>
<tr><td>Factory setting</td><td colspan="2">DSP NORM</td></tr>
</table>

6.7.4 INFOMATN

You can find the following information through Submenu.

Submenu	Description
FIRM VER	Display firmware version of the product.
DEVI REV	Display the version of device.
HART VER	Display the version of HART communication.
dEid	Display ID number of device.
POLL ADD	Display Polling address of the device in HART communication.
TRAVEL K	Display the accumulated total travel distance of the valve after the positioner has been used. (Unit: K%) One full travel distance from full close to full open means 100% = 0.001K% For example, if the travel value is 1K%, this means that the valve has moved 1000 stroke percentages.
OP TIME	Display the time that takes from the valve fully close to fully open during Auto calibration. Unit : Second
CL TIME	Display the time that takes from the valve fully open to fully close during Auto calibration. Unit : Second
TEMPERAT	Display the current ambient temperature (℃).
TEMP MAX	Display the recorded highest ambient temperature value after using the product.
TEMP MIN	Display the recorded lowest ambient temperature value after using the product.

6.7.5 DIAGNOST

<table>
<tr><th>Submenu</th><th colspan="2">Description</th></tr>
<tr><td>ERR CODE</td><td colspan="2">Display error code of the product.
You can check the error code to resolve the problem.
For details, please refer to Page 51.</td></tr>
<tr><td rowspan="5">AUTO CHK</td><td colspan="2">Self-diagnosis function checks the installation status of the product, internal gear, pneumatic tube connection, etc.</td></tr>
<tr><td>Error Code</td><td>Description</td></tr>
<tr><td>PNEUMATIC</td><td>No pneumatic output to OUT port.</td></tr>
<tr><td>POTENMTR</td><td>Main shaft gear and Potentiometer gear are dislocated due to external shocks, etc.</td></tr>
<tr><td>SIZE ANGLE</td><td>Display rotation angle of the lever of the product. Installation problems do not occur frequently for Rotary product. However, for linear product, the angle of the product may be bigger or less than the effective angle(60º) depending on bracket and the position of lever connection. If displayed number is less than 40º, please refer to page 17-18 to correctly install the product again.</td></tr>
<tr><td>COMPENSATE</td><td>Display the optimal compensation value based on the current rotation angle.</td></tr>
<tr><td rowspan="2">PST RUN</td><td colspan="2">Run PST function according to the following PST CFG configuration.</td></tr>
<tr><td>What is PST?</td><td>Partial stroke testing (or PST), within the range of not affecting to the flow process, PST prevents the valve stem from sticking by moving the valve finely according to the set value and the period. In case of emergency, it can make the valve operate normally.</td></tr>
<tr><td>PST CFG</td><td colspan="2">Set necessary items to execute PST function.
Submenu of PST CFG is as follow.
 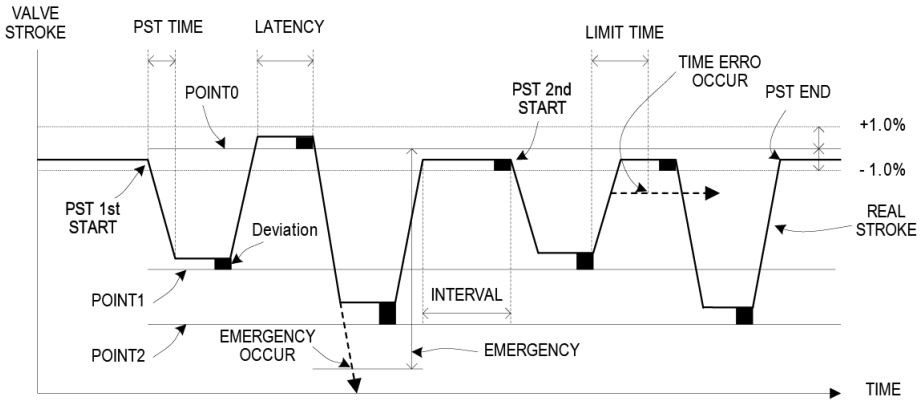
</td></tr>
</table>

	Submenu	Description	
	0P POINT	Set the initial valve position for PST to start. Valve initial position must be within ±1% from "**0S POINT**". If not, wait until this condition is satisfied.	
		Default value	100%
		Range	0~100%
	1S POINT	Set 1st target position of PST.	
		Default value	90%
		Range	0~100%
	2N POINT	Set 2nd target position of PST.	
		Default value	80%
		Range	0~100%
	INTERVAL	Set the waiting time after the first PST is end and before the second PST start.	
		Default value	20 (Seconds)
		Range	1~100 (Seconds)
	LATENCY	Set the waiting time from "**1S POINT**" to "**2N POINT**" start. After reaching the first target point "**1S POINT**", return to the initial position, wait for "**LATENCY**" time specified by the user, and then move to the second "**2S POINT**" target point again.	
		Default value	10 (Seconds)
		Range	1~100 (Seconds)
	LMT TIME	Set the time allowed to reach the target point. If the time to reach the target value during the PST execution exceeds "**LMT TIME**" time or there is no movement, PST is considered to have failed and PST is immediately interrupted.	
		Default value	50 (Seconds)
		Range	1~100 (Seconds)
	EMERGNCY	In PST process, if the valve position exceeds "**EMERGNCY**" set value, PST function is stopped.	
		Default value	15%
		Range	0~100%
PST REDy	Check PST function execution result value. The following information is displayed on LCD based on the set values and the execution results. See the table below to confirm PST execution result information.		
	Result Value	**PST REDy**	Ready to run PST.
		PST SUCS	PST success.

		PST TOUT	"LMT TIME" failed to reach the target value within the set time value range.
		PST FIXD	Valve has no action.
		PST DOUT	Exceed the target value more than 1%.
		PST EMRG	When allowable range of valve movement, i.e. "EMERGENCY" value is exceeded.
AL1 NONE	Set Alarm 1 According to the set value, If the following conditions are satisfied, the alarm circuit is turned “ON”, and LCD displayed **A1** symbol. It remains “OFF” during normal operation. 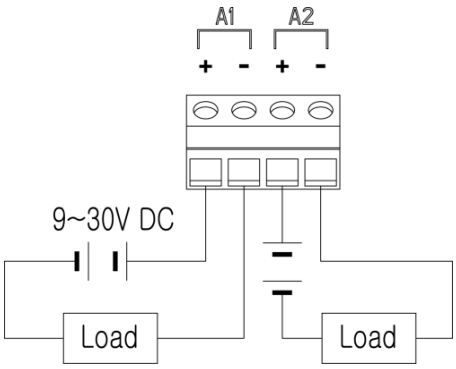 		
	Mode	**AL1 URGT**	When the product has a serious problem (If priority value of error code is “0”) (Refer to page 51)
		AL1 PRI 1	When there is a potential problem. (If priority value of error code is “1”) (Refer to page 51)
		AL1 F_CL	When the valve is fully closed.
		AL1 F_OP	When the valve is fully opened.
		AL1 NONE	Disable this alarm function
	Factory setting	**AL1 NONE**	
AL2 NONE	Set Alarm 2 According to the set value, If the following conditions are satisfied, the alarm circuit is turned “ON”, and LCD displayed **A2** symbol. It remains “OFF” during normal operation.		
	Mode	Same as “**AL1 NONE”** above	
	Factory setting	**AL2 NONE**	

6.7.6 EMERGNCy

Submenu	Description		
PASSWORD	Must put a password to enter this menu. The password is set at the factory and cannot be changed by the user.		
	Factory setting	Press **UP > ENTER > DOWN > UP** button sequentially. (1321 on LCD)	
EMGY NON	Set the position of the valve to be moved when an abnormality of the positioner is detected. (If priority value of error code is “0”) (refer to page 51)		
	Mode	**EMGy NON**	Do not take any action.
		EMGy OP	Open the valve fully.
		EMGy CL	Close the valve fully.
		EMGy STP	Stop the valve operation.
	Factory setting	**EMGy NON**	
FULL OP	Open the valve fully by manual regardless of the input signal.		
FULL CL	Close the valve fully by manual regardless of the input signal.		
STOP	Maintain the present valve position regardless of the input signal.		
UNLOCK	It locks to prevent changing all parameter values. When set to “**LOCK**”, all commands such as Auto calibration, PID changes, and parameter values settings cannot be changed.		
	Mode	**LOCK**	Lock the program
		UNLOCK	Unlock the program
	Factory setting	**UNLOCK**	

7 Error code and Troubleshooting

7.1 Error code during Auto calibration

- Error code as below is displayed on LCD if an error occurs during Auto calibration.
- Check the error code and refer to the table below to solve the problem.

No	Error Code	Cause	Solution
1	**STEP0 V0**	Displayed when the valve does not stop after a long period of time when the data is measured to detect the first stop of the valve during auto calibration. And it is mainly caused by damage to Main board.	• Replace Main PCB.
2	**STEP1 PZ**	Displayed when Zero point is lower than allowable range.	• Check the status of the positioner installation or reinstall the positioner. • Set initial angle (Zero point) of the lever higher than the current status.
3	**STEP2 PE**	Displayed when End point is higher than allowable range.	• Check the installation status of the positioner or reinstall the positioner. • Set final angle (End point) of the lever lower than the current status.
4	**ACT TYPE**	Displayed when Zero point and End point of the lever are too close or equal.	• Check the status of supply air. • Unplug the potentiometer cable in the positioner and reconnect it to Main board. • Check the status of feedback lever installation. And set the operation angle that between initial angle(Zero point) and final angle(End point) over 40 degree. • Replace Main PCB.
5	**STEP3 CT**	Displayed when Close time is too long during auto calibration.	• Check the status of feedback lever installation. • If Zero point of the valve changes, please conduct auto calibration 2~3 times. • If the actuator size is too big, please set TbL value as TbL 4 LLS and conduct auto calibration again. (Refer to page37)

6	**STEP4 OT**	Displayed when Open time is too long during auto calibration.	• Check the status of feedback lever installation. • If the actuator size is too big, please set TbL value as TbL 4 LLS and conduct auto calibration again. (Refer to page37)
7	**STEP5 BL**	Displayed when LOW BIAS value is not found within the allowed time.	• Check the status of supply air. • If Torque motor of the positioner is damaged, please replace Torque motor. • Check the status of feedback lever installation.
8	**STEP6 BH**	Displayed when HIGH BIAS value is not found within the allowed time.	• Check the status of supply air. • If Torque motor of the positioner is damaged, please replace Torque motor. • Check the status of feedback lever installation.
9	**PID TBLE**	Displayed when PID Table memory of Main PCB is damaged.	• Replace Main PCB.
10	**STEP7 MX**	Displayed when the positioner can't find the accurate position due to friction of the actuator is too big.	• Change TbL value as TbL 3 LS to minimize the friction of the valve stem and conduct auto calibration again. (Refer to page37)
11	**ERR**	Displayed when auto calibration failed due to other unknown reasons.	• Replace the positioner.

7.2 Error code during operation

- If there is a problem during the operation, please enter "**ERR CODE**" which is Submenu of "**DIAGNOST**" to check the error code.
- Check the error code and refer to the table below to solve the problem.

No	Code	priority	Cause	Solution
1	**L**	1	Valve End point is set too high	• Check whether the positioner is installed too high or low. • Check whether the positioner is installed too far from the actuator. (Check the angle of use) • Check the potentiometer gear and main gear are out of position. (The cause of the problem is strong vibration or external shock).
2	**K**	1	Valve Zero point is set too low	• Check whether the positioner is installed too high or low. • Check whether the positioner is installed too far from the actuator. (Check the angle of use) • Check the potentiometer gear and main gear are out of position. (The cause of the problem is strong vibration or external shock).
3	**J**	1	Valve End and Zero points are set too close. (Use angle is too small)	• Increase the angle of use by repositioning the positioner closer to the actuator.
4	**I**	1	Input current is below 3.8mA	• Check input current signal
5	**H**	1	Input current is over 22mA	• Check input current signal
6	**G**	1	BIAS value exceeds limit	• Run Auto-Calibration again (Accuracy is significantly reduced when used without auto-calibration)
7	**F**	1	Ambient temperature is too high	• Check ambient temperature
8	**E**	1	Ambient temperature is too low	• Check ambient temperature
9	**D**	1	Used over 100,000 cycles	• Check positioner regularly
10	**C**	0	Used over 500,000 cycles	• Check positioner regularly
11	**B**	0	Used over 1million cycles	• Replace positioner
12	**A**	0	EEPROM damaged	• Replace main PCB

tissin

Solutions for Control Valve System

Tissin Co.,Ltd.

201-1105, No 397, Seokcheon-ro,

Bucheon-Si,Gyeonggi-do, Korea 14449

Tel : +82-32-624-4573,

Fax : +82-32-624-4574

www.tissin.co.kr